Preparation of compressed air → Maintenance units and components

Filter pressure regulator, Series AS3-FRE

► G 1/2 ► filter porosity: 25 µm ► lockable ► For padlocks ► suitable for ATEX

00133866

ATEX	II 2G2D T4 X
Version	1-in-1, Can be assembled into blocks
Parts	Filter, Pressure controller
Mounting orientation	vertical
Medium	Compressed air
Medium temperature min./max.	-10°C / +50°C
Ambient temperature min./max.	-10°C / +50°C
Regulator type	Diaphragm-type pressure regulator
Regulator function	with relieving air exhaust
Pressure supply	single
Filter reservoir volume	49 cm³
Filter element	exchangeable
Condensate drain	semi-automatic, open without pressure

Materials:	
Housing	Polyamide
Front plate	Acrylonitrile butadiene styrene
Seals	Acrylonitrile Butadiene Rubber
Threaded bushing	Die cast zinc
Reservoir	Die cast zinc
Filter insert	Polyethylene

Technical Remarks

- The pressure dew point must be at least 15 °C under ambient and medium temperature and may not exceed 3 °C.
- Max. residual oil content acc. to ISO 8573-4 at the outlet: 10 mg/m³

	Port	Qn	Working pressure min./max.	Adjustment range min./max.	Weight	Part No.
		[l/min]	[bar]	[bar]	[kg]	
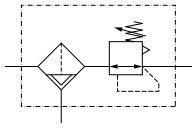	G 1/2	5100	1.5 / 16	0.5 / 8	0.797	**R412007189**
Nominal flow Qn at p1 = 6.3 bar and Δp = 1 bar						

Preparation of compressed air → Maintenance units and components

Filter pressure regulator, Series AS3-FRE

► G 1/2 ► filter porosity: 25 µm ► lockable ► For padlocks ► suitable for ATEX

Pressure characteristics curve

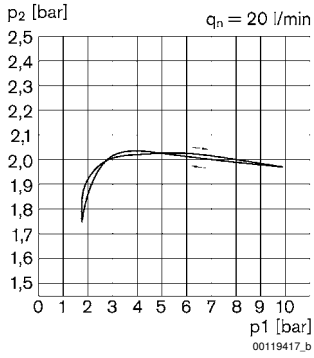

p1 = Working pressure
p2 = Secondary pressure
qn = Nominal flow

Flow rate characteristic (p2: 0,5 - 8 bar)

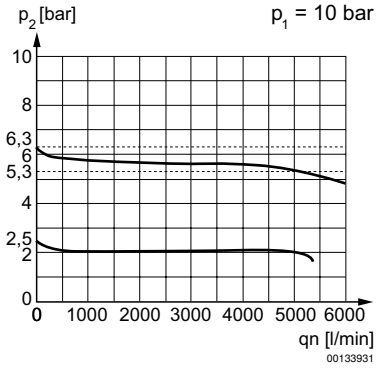

p1 = Working pressure
p2 = Secondary pressure
qn = Nominal flow

Preparation of compressed air → Maintenance units and components

Filter pressure regulator, Series AS3-FRE

► G 1/2 ► filter porosity: 25 µm ► lockable ► For padlocks ► suitable for ATEX

Dimensions

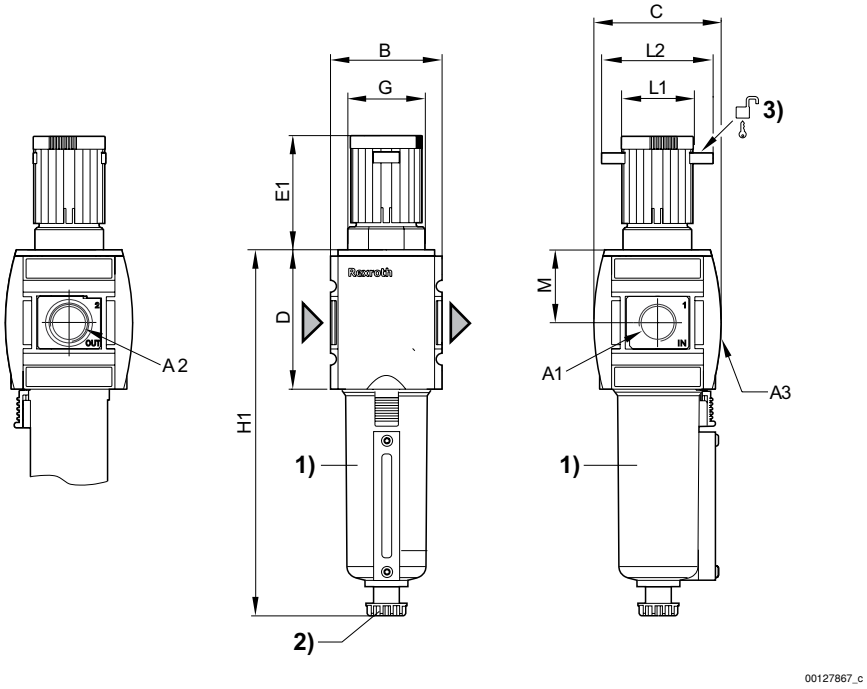

A1 = input
A2 = output
A3 = pressure gauge connection
1) Metal reservoir with level indicator
2) Semi-automatic condensate drain
3) Mounting option for padlocks; max. shackle Ø 8

A1	A2	A3	B	C	D	E1	G	H1	L1	L2	M	
G 1/2	G 1/2	G 1/4	63	74	80	63.5	M42x1,5	193.5	41	60	42.5	