Valve systems → Supplementary products

5/2-way valve, Series CD01-PI

► Qn = 1350 l/min ► plate connection ► compressed air connection output: Base plate according to ISO 15407-2 ► Electr. connection: Plug, ISO 15407-2 ► Can be assembled into blocks ► Manual override: without detent, with detent ► single solenoid, double solenoid

00134500

Standards	ISO 15407-2, 26 mm
Version	Spool valve
Sealing principle	soft sealing
Blocking principle	Single base plate principle, Double base plate principle
Working pressure min./max.	-0.9 bar / 10 bar
Ambient temperature min./max.	-15°C / +50°C
Medium temperature min./max.	-5°C / +50°C
Medium	Compressed air
Max. particle size	40 µm
Oil content of compressed air	0 mg/m³ - 5 mg/m³
Pneumatic ports	Base plate ISO 15407
Protection classwith electrical connector/ plug	IP 65
Protection class according to NEMA	NEMA 4
Status display LED	Green
Mounting screw	M4
mounting screw tightening torque	1.6 Nm
Materials:	
Housing	Aluminum
Seals	Hydrogenated nitrile butadiene rubber

Technical Remarks

- The pressure dew point must be at least 15 °C under ambient and medium temperature and may not exceed 3 °C.
- The oil content of air pressure must remain constant during the life cycle.
- Use only the approved oils from Bosch Rexroth, see chapter „Technical information“.

Operating voltage			Voltage tolerance			Power consumption
DC	AC 50 Hz	AC 60 Hz	DC	AC 50 Hz	AC 60 Hz	DC
						W
24 V	-	-	-10% / +10%	-	-	1.2
-	110 V	110 V	-10% / +10%	-10% / +15%	-10% / +15%	1.2

	MO	Operating voltage			Flow conductance		Qn		Control pressure min./ max.	Switch-on time	Switch-off time		Fig.	Part No.
		DC	AC 50 Hz	AC 60 Hz	b	C	1►2	2►3						
						[l/(s*bar)]	[l/min]		[bar]	[ms]	[ms]	[kg]		
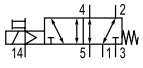		24 V -	- 110 V	- 110 V	0.2	5.63	1350	1350	2 / 10	18	46	0.197	Fig. 1	**R412009885** R412009886
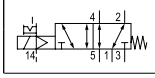		24 V -	- 110 V	- 110 V	0.2	5.63	1350	1350	2 / 10	18	46	0.197	Fig. 1	**R412009887** R412009888

Part numbers marked in bold are available from the central warehouse in Germany, see the shopping basket for more detailed information

Valve systems → Supplementary products

5/2-way valve, Series CD01-PI

► Qn = 1350 l/min ► plate connection ► compressed air connection output: Base plate according to ISO 15407-2 ► Electr. connection: Plug, ISO 15407-2 ► Can be assembled into blocks ► Manual override: without detent, with detent ► single solenoid, double solenoid

	MO	Operating voltage			Flow conductance		Qn		Control pressure min./max.	Switch-on time	Switch-off time		Fig.	Part No.
		DC	AC 50 Hz	AC 60 Hz	b	C	1►2	2►3						
						[l/(s*bar)]	[l/min]		[bar]	[ms]	[ms]	[kg]		
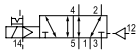		24 V -	- 110 V	- 110 V	0.2	5.63	1350	1350	2 / 10	18	46	0.197	Fig. 2	R412009889 R412009890
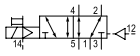		24 V -	- 110 V	- 110 V	0.2	5.63	1350	1350	2 / 10	18	46	0.197	Fig. 2	R412009891 R412009892
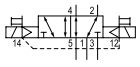		24 V -	- 110 V	- 110 V	0.2	5.63	1350	1350	2 / 10	14	14	0.261	Fig. 3	**R412009881** R412009882
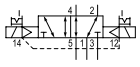		24 V -	- 110 V	- 110 V	0.2	5.63	1350	1350	2 / 10	14	14	0.261	Fig. 3	**R412009883** R412009884

Part No.	Note
R412009885 R412009886	1) -
R412009887 R412009888	1) -
R412009889 R412009890	-
R412009891 R412009892	-
R412009881 R412009882	1) -
R412009883 R412009884	1) -

MO = Manual override
1) UR (Underwriters Laboratories)
Nominal flow Qn at 6 bar and Δp = 1 bar.
Please note that the flows vary, depending on the base plate used.

Valve systems → Supplementary products

5/2-way valve, Series CD01-PI

► Qn = 1350 l/min ► plate connection ► compressed air connection output: Base plate according to ISO 15407-2 ► Electr. connection: Plug, ISO 15407-2 ► Can be assembled into blocks ► Manual override: without detent, with detent ► single solenoid, double solenoid

Dimensions, Fig. 1

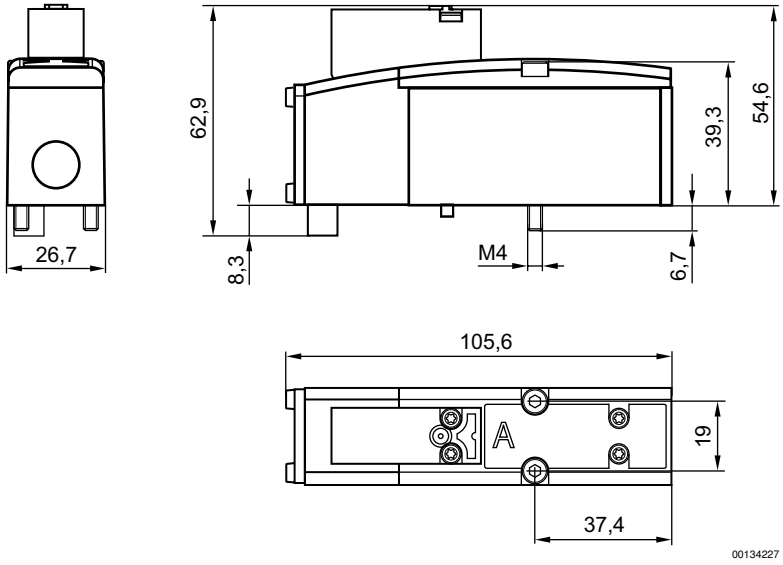

Dimensions, Fig. 2

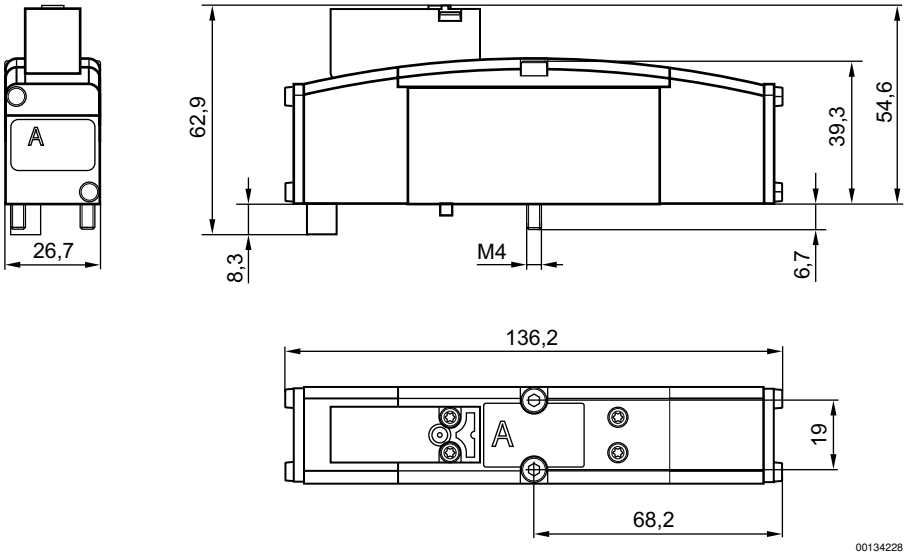

Valve systems → Supplementary products

5/2-way valve, Series CD01-PI

► Qn = 1350 l/min ► plate connection ► compressed air connection output: Base plate according to ISO 15407-2 ► Electr. connection: Plug, ISO 15407-2 ► Can be assembled into blocks ► Manual override: without detent, with detent ► single solenoid, double solenoid
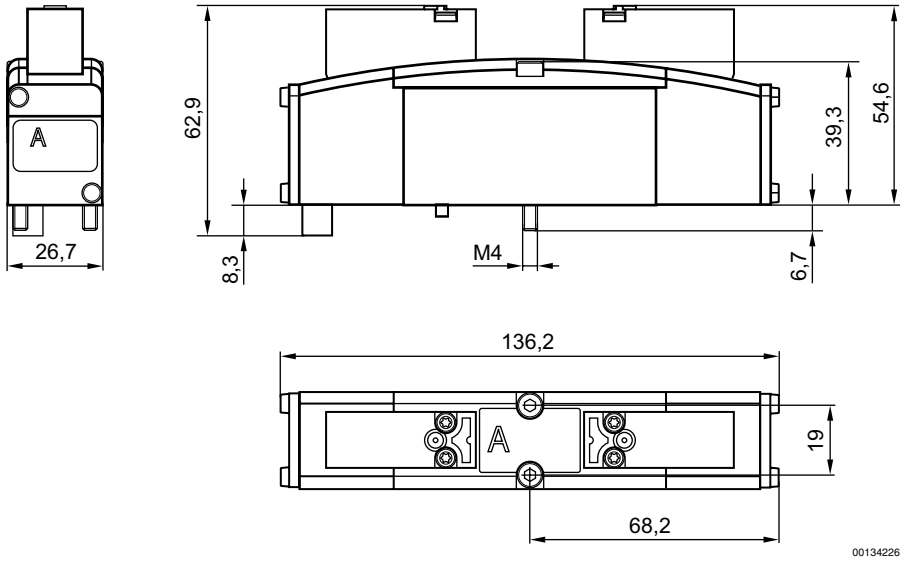
Dimensions, Fig. 3