Directional valves → Supplementary products

2/2-way valve, Series CD07

► Qn = 1400 l/min ► pipe connection ► compressed air connection output: M14x1,5 ► suitable for ATEX

00134148

Version	Spool valve, zero overlap
Sealing principle	soft sealing
Working pressure min./max.	-0.95 bar / 10 bar
Control pressure min./max.	2.5 bar / 10 bar
Ambient temperature min./max.	-25°C / +80°C
Medium temperature min./max.	-25°C / +80°C
Medium	Compressed air
Max. particle size	50 μm
Oil content of compressed air	0 mg/m³ - 1 mg/m³
Materials:	
Housing	Die cast zinc
Seals	Acrylonitrile Butadiene Rubber

Technical Remarks
■ The pressure dew point must be at least 15 °C under ambient and medium temperature and may not exceed 3 °C.
■ The oil content of air pressure must remain constant during the life cycle.
■ Use only the approved oils from Bosch Rexroth, see chapter „Technical information“.

		Compressed air connection			Flow rate value		
		Input	Output	Pilot connection	Qn 1►2	Weight	Part No.
					[l/min]	[kg]	
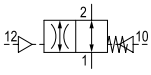	NO	M14x1,5	M14x1,5	M10x1, M16x1	1400	0.4	**5710409000**
Nominal flow Qn at 6 bar and Δp = 1 bar Nominal flow Qn (1►2) can be throttled up to 100 l/min.							

Directional valves → Supplementary products

2/2-way valve, Series CD07

► Qn = 1400 l/min ► pipe connection ► compressed air connection output: M14x1,5 ► suitable for ATEX

Dimensions

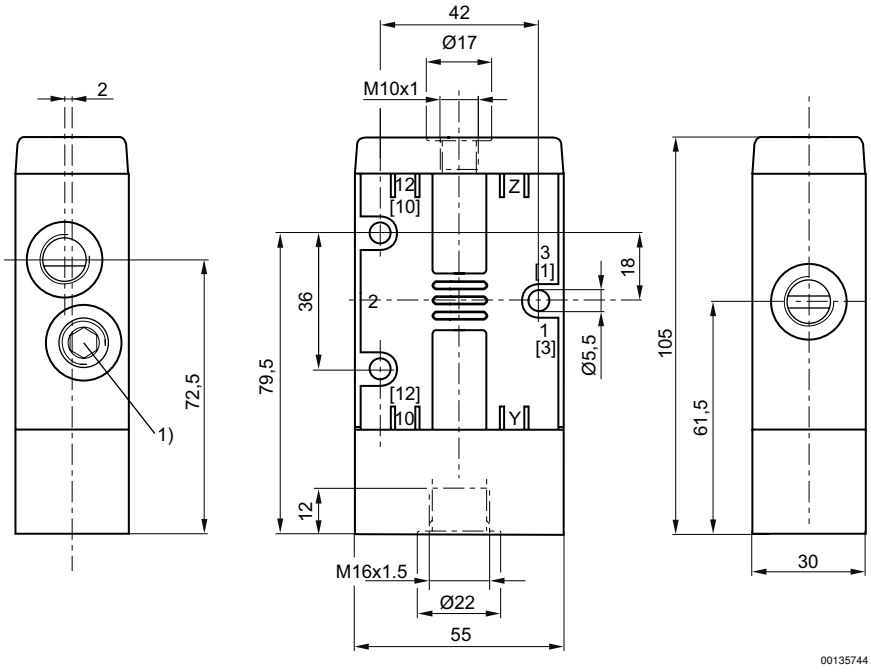

1) Blanking screw