Flow and check valves → Supplementary products

Shuttle valve (OR)

► Qn = 80 - 6100 l/min ► pipe connection ► Compressed air connection input: M5 - G 1 ► compressed air connection output: M5 - G 1

00108480

Version	Poppet valve
Logic function	Shuttle valve (OR)
Sealing principle	soft sealing
Working pressure min./max.	1 bar / 10 bar
Ambient temperature min./max.	+0 °C / +80 °C
Medium temperature min./max.	+0 °C / +80 °C
Medium	Compressed air
Max. particle size	5 µm
Oil content of compressed air	0 mg/m³ - 1 mg/m³
Materials:	
Housing	See table below
Seals	Acrylonitrile Butadiene Rubber
Threaded bushing	See table below

Technical Remarks

- The pressure dew point must be at least 15 °C under ambient and medium temperature and may not exceed 3 °C.
- The oil content of air pressure must remain constant during the life cycle.
- Use only the approved oils from Bosch Rexroth, see chapter „Technical information“.

	Compressed air connection		Qn	Weight	Fig.	Note	Part No.
	Input	Output					
			[l/min]	[kg]			
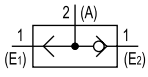	M5	M5	80	0.011	Fig. 1	1); 3)	**0821000004**
	G 1/8	G 1/8	640	0.038	Fig. 2	2); 4)	**0821000002**
	G 1/4	G 1/4	1550	0.1	Fig. 2	2); 4)	**0821000003**
	G 3/8	G 3/8	2150	0.2	Fig. 3	2); 5)	**0821000010**
	G 1/2	G 1/2	2300	0.2	Fig. 3	2); 5)	**0821000011**
	G 3/4	G 3/4	4800	0.5	Fig. 4	2); 5)	**0821000014**
	G 1	G 1	6100	0.5	Fig. 4	2); 5)	0821000015

1) Housing material: Polyamide
2) Housing material: Aluminum
3) Material Threaded bushing: Brass
4) Material Threaded bushing: Aluminum; Steel
5) Material Threaded bushing: Aluminum
Nominal flow Qn at 6 bar and Δp = 1 bar

Flow and check valves → Supplementary products

Shuttle valve (OR)

► Qn = 80 - 6100 l/min ► pipe connection ► Compressed air connection input: M5 - G 1 ► compressed air connection output: M5 - G 1

Fig. 1

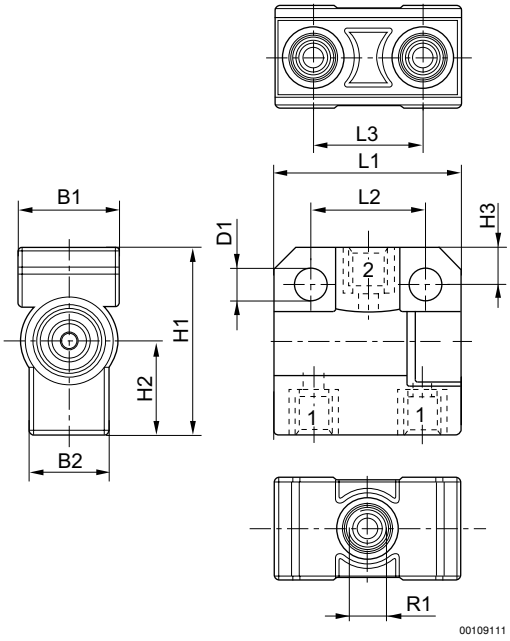

Part No.	R1	D1	L1	L2	L3	L4	H1	H2	H3	B1	SW	*
0821000004	M5	4.3	26	16	15	–	26	13	5	14	–	5

* = depth of thread

Fig. 2

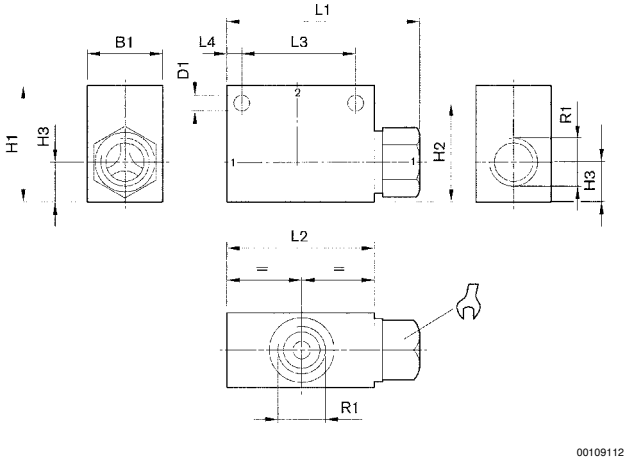

Part No.	R1	D1	L1	L2	L3	L4	H1	H2	H3	B1	SW	*
0821000002	G 1/8	4.3	42	32	25	3.5	25	21	8.5	16	14	8
0821000003	G 1/4	5.5	67.5	55	38	8.5	36.2	30.2	13.2	25	22	12

* = depth of thread

Flow and check valves → Supplementary products

Shuttle valve (OR)

► Qn = 80 - 6100 l/min ► pipe connection ► Compressed air connection input: M5 - G 1 ► compressed air connection output: M5 - G 1

Fig. 3

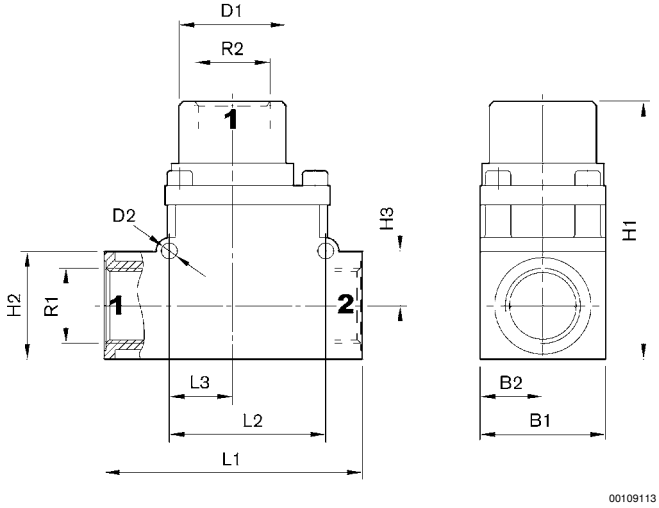

Part No.	R1	R2	D1	D2	L1	L2	L3	H1	H2	H3	B1	B2
0821000010	G 3/8	G 3/8	34	4.5	72	44	18	72	30	15	35	17.5
0821000011	G 1/2	G 1/2	34	4.5	72	44	18	72	30	15	35	17.5

Fig. 4

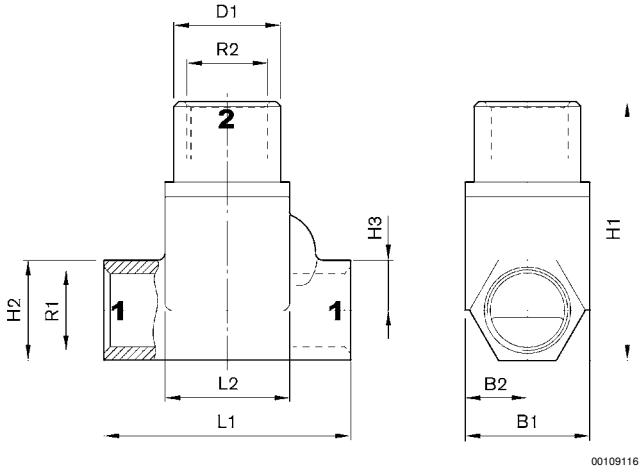

Part No.	R1	R2	D1	D2	L1	L2	L3	H1	H2	H3	B1	B3
0821000014	G 3/4	G 3/4	44	–	100	51	–	107	41	20.5	50	25
0821000015	G 1	G 1	44	–	100	51	–	107	41	20.5	50	25