Directional valves → Mechanically operated

3/2-way valve, Series AP

► Qn= 190 l/min ► pipe connection ► compressed air connection output: M5

00108499

Version	Poppet valve
Working pressure min./max.	0 bar / 10 bar
Ambient temperature min./max.	-30°C / +80°C
Medium temperature min./max.	-30°C / +80°C
Medium	Compressed air
Max. particle size	5 µm
Oil content of compressed air	0 mg/m³ - 5 mg/m³

Materials:

Housing	Aluminum
Seals	Acrylonitrile Butadiene Rubber

	Actuating element	Compressed air connection		Qn 1 → 2	Qn 2 → 3	Weight	Fig.	Note	Part No.
		Input	Output						
				[l/min]	[l/min]	[kg]			
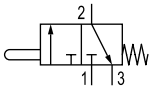	Plunger	M5	M5	190	150	0.036	Fig. 1	-	**0820408001**
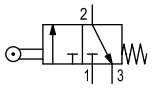	Roller	M5	M5	190	150	0.05	Fig. 2	-	**0820408002**
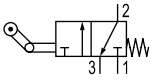	Roller lever, one-way trip	M5	M5	190	150	0.055	Fig. 3	-	**0820408003**
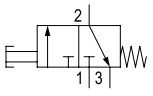	Push button	M5	M5	190	150	0.05	Fig. 4	-	**0820408004**
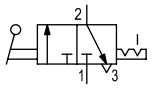	Lever	M5	M5	190	150	0.042	Fig. 5	-	**0820408005**
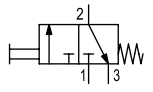	panel installation	M5	M5	190	150	0.068	Fig. 6	1); 2)	**R450055451**

1) Please order control button separately.
2) Cannot be combined with mushroom button with detent and rotary release R412012741
Nominal flow Qn at 6 bar and Δp = 1 bar

Directional valves → Mechanically operated

3/2-way valve, Series AP

► Qn= 190 l/min ► pipe connection ► compressed air connection output: M5

Actuating force

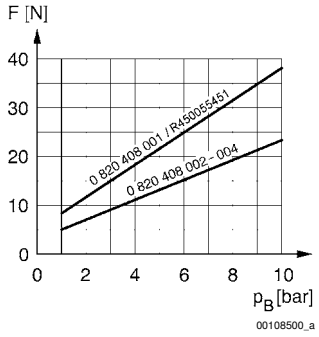

F = actuating force
P_B = Working pressure

Dimensions, Fig. 1, Basic valve

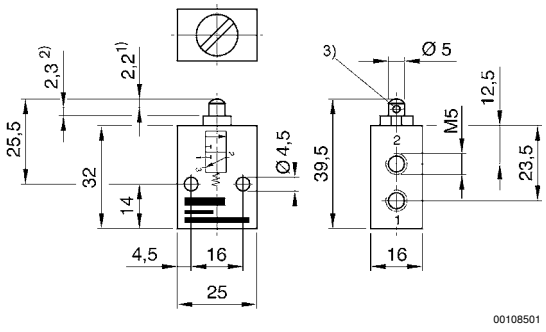

1) actuating stroke
2) overstroke
3) Exhaust
Dimensions of basic valve apply to all types of actuation.

Dimensions, Fig. 2

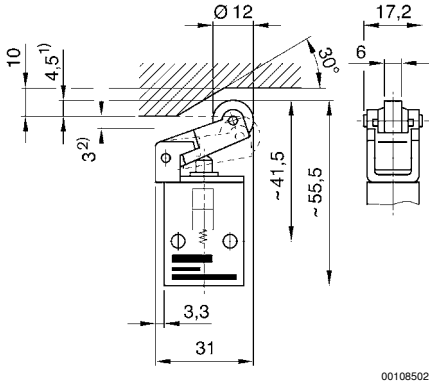

1) actuating stroke
2) overstroke

Directional valves → Mechanically operated

3/2-way valve, Series AP

► Qn= 190 l/min ► pipe connection ► compressed air connection output: M5

Dimensions, Fig. 3

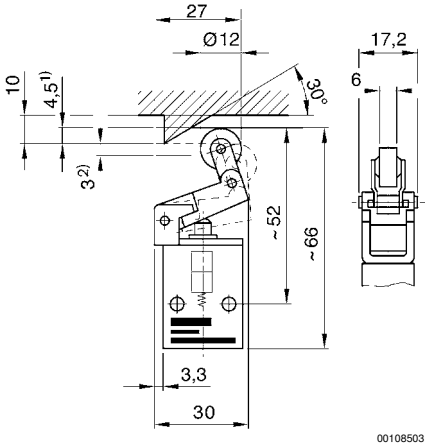

1) actuating stroke
2) overstroke

Dimensions, Fig. 4

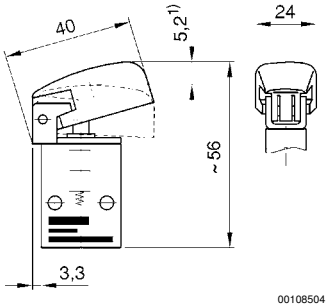

1) actuating stroke

Dimensions, Fig. 5

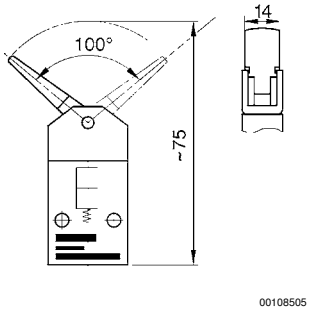

actuating torque: 5 Ncm

Directional valves → Mechanically operated

3/2-way valve, Series AP

► Qn= 190 l/min ► pipe connection ► compressed air connection output: M5

Dimensions, Fig. 6

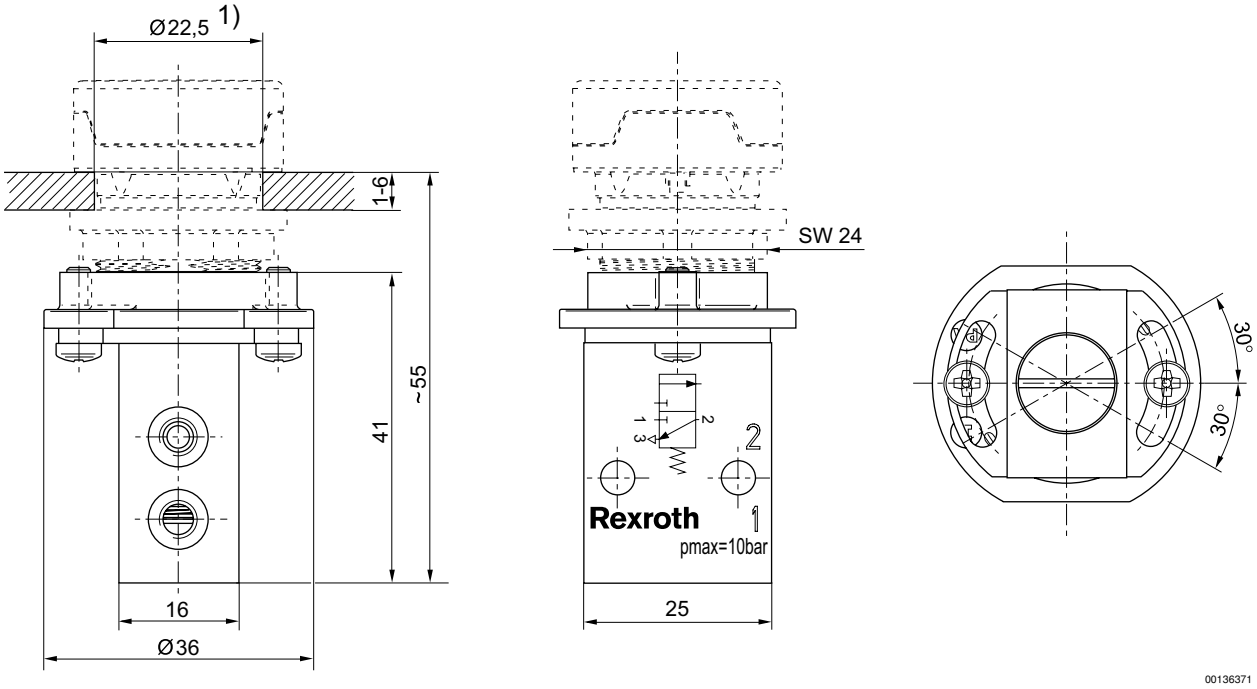

1) cut-out in the front plate

Dimensions, cut-out in the front plate

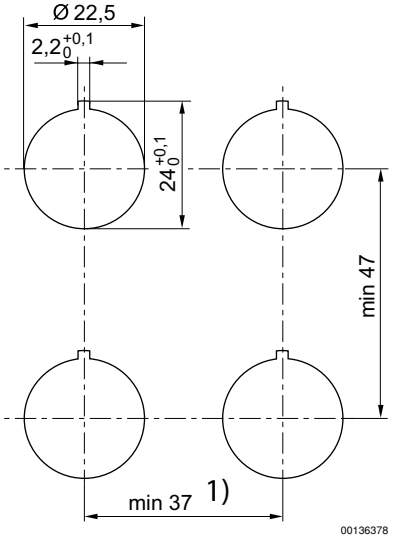

1) For the mushroom buttons (R412012738, R412012739, R412012740) a minimum distance 41 mm must be ensured.