Sensor technologies → Pressure sensors

Pressure Switches, Series PM1

► Operating pressure: -0.9 - 16 bar ► mechanical ► electr. connection: Plug, M12x1 ► Spring-loaded bellow, adjustable

18043

Measurement	Relative pressure
Switching element	microswitch (input/output)
Switching frequency	1,5 Hz
Protection against overpressure	80 bar
Ambient temperature min./max.	-20°C / +80°C
Medium temperature min./max.	-10°C / +80°C
Medium	Compressed air hydraulic oil
Shock resistance max. (XYZ direction)	15 g
Vibration resistance (XYZ direction)	10 g (60 - 500 Hz)
Switching point	adjustable
Hysteresis	max. switching pressure difference
DC operating voltage min./max.	12 V - 30 V
Operational voltage AC min./max.	12 V - 30 V
Mounting orientation	Any
Mounting types	via through holes
Function	change-over contact (mechanical)
Protection class	IP 67
Weight	0.15 kg
Materials:	
Housing	Aluminum
Seals	Acrylonitrile Butadiene Rubber
Bellow	Brass
Electr. connection	Brass, nickel-plated

Technical Remarks

- Switching function increasing pressure: contact switches from 1-2 to 1-3.Switching function decreasing pressure: contact switches from 1-3 to 1-2.
- Notice: Too-high currents can damage contacts. Inductive or capacitive loads must be equipped with appropriate spark-quenching!
- The microswitch has silver-plated contacts.

	Type	Operating pressure range min./max.	Compressed air connection	Repeatability (% of full scale value)	Fig.	Note	Part No.
		[bar]					
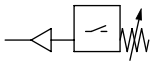	PM1-M3-G014	-0.9 / 0	internal thread, G1/4	± 1 %	Fig. 1	-	**R412010716**
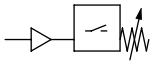	PM1-M3-G014	0.2 / 16	internal thread, G1/4	± 1 %	Fig. 1	1)	**R412010717**
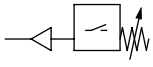	PM1-M3-F001	-0.9 / 0	Flange with O-ring, Ø 5x1,5	± 1 %	Fig. 2	-	R412010719

1) Min. switching pressure range 0.2 bar falling/0.5 bar rising

Sensor technologies → Pressure sensors

Pressure Switches, Series PM1

► Operating pressure: -0.9 - 16 bar ► mechanical ► electr. connection: Plug, M12x1 ► Spring-loaded bellow, adjustable

	Type	Operating pressure range min./max.	Compressed air connection	Repeatability (% of full scale value)	Fig.	Note	Part No.
		[bar]					
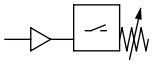	PM1-M3-F001	0.2 / 16	Flange with O-ring, Ø 5x1,5	± 1 %	Fig. 2	1)	**R412010720**
1) Min. switching pressure range 0.2 bar falling/0.5 bar rising							

Fig. 1

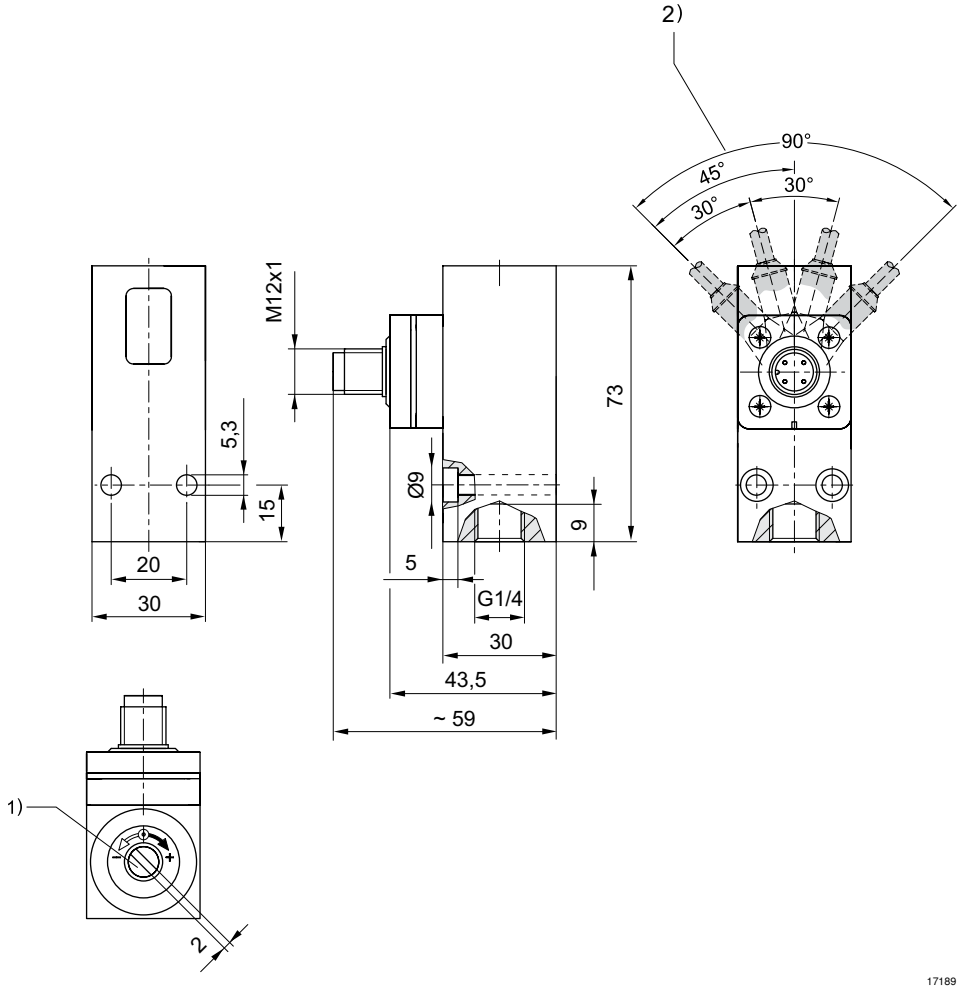

1) Adjustment screw, self-holding
2) Detent position

Sensor technologies → Pressure sensors

Pressure Switches, Series PM1

► Operating pressure: -0.9 - 16 bar ► mechanical ► electr. connection: Plug, M12x1 ► Spring-loaded bellow, adjustable

Fig. 2

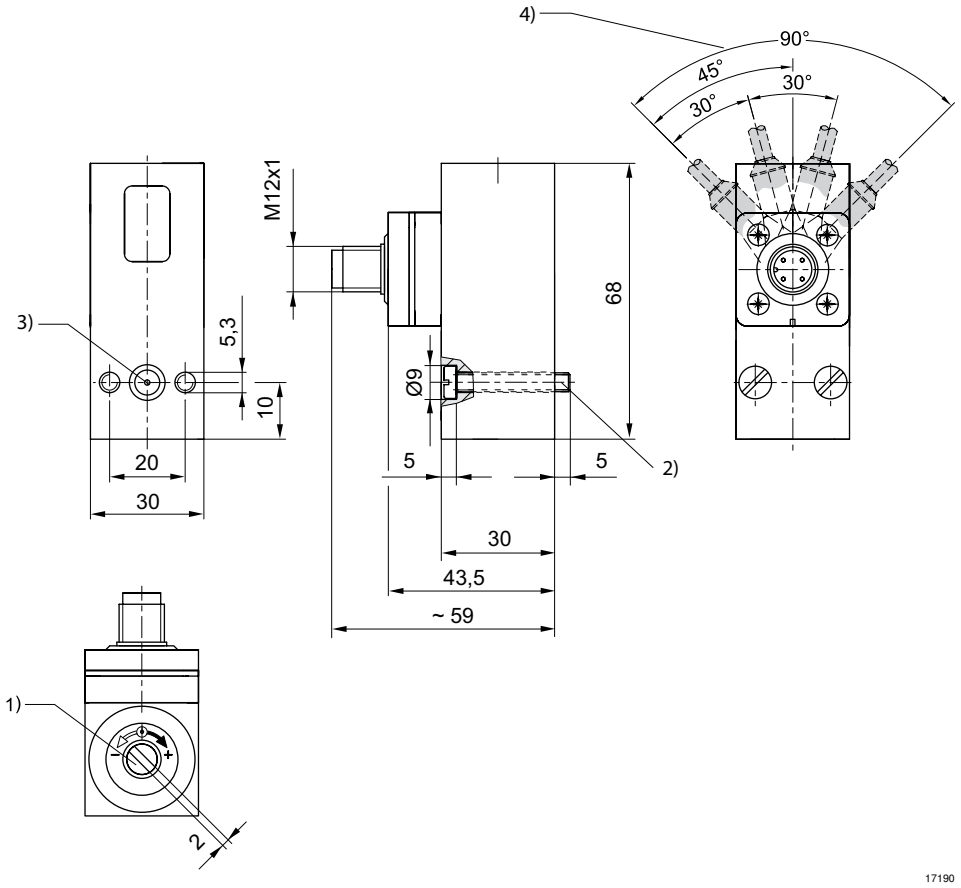

1) Adjustment screw, self-holding
2) cylinder screw M5x30 (included in scope of delivery)
3) O-ring Ø5x1,5 (included)
4) Detent position

Pin assignment

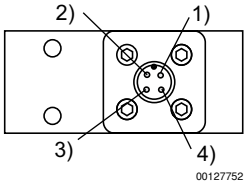

1) +UB
2) break contact
3) No function
4) make contact

Pressure Switches, Series PM1

► Operating pressure: -0.9 - 16 bar ► mechanical ► electr. connection: Plug, M12x1 ► Spring-loaded bellow, adjustable

differential switching pressure characteristic curve (-0,9 – 0 bar)

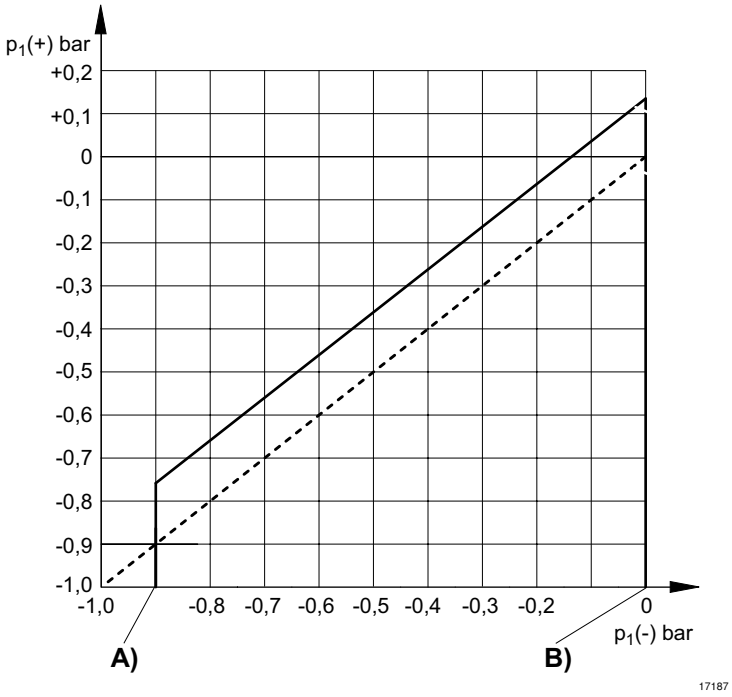

A) p1 (-), min.
B) p1 (-), max.
p1 (+) = upper switching pressure with increasing pressure
p1 (-) = lower switching pressure with decreasing pressure

Sensor technologies → Pressure sensors

Pressure Switches, Series PM1

► Operating pressure: -0.9 - 16 bar ► mechanical ► electr. connection: Plug, M12x1 ► Spring-loaded bellow, adjustable

differential switching pressure characteristic curve (0,2 – 16 bar)

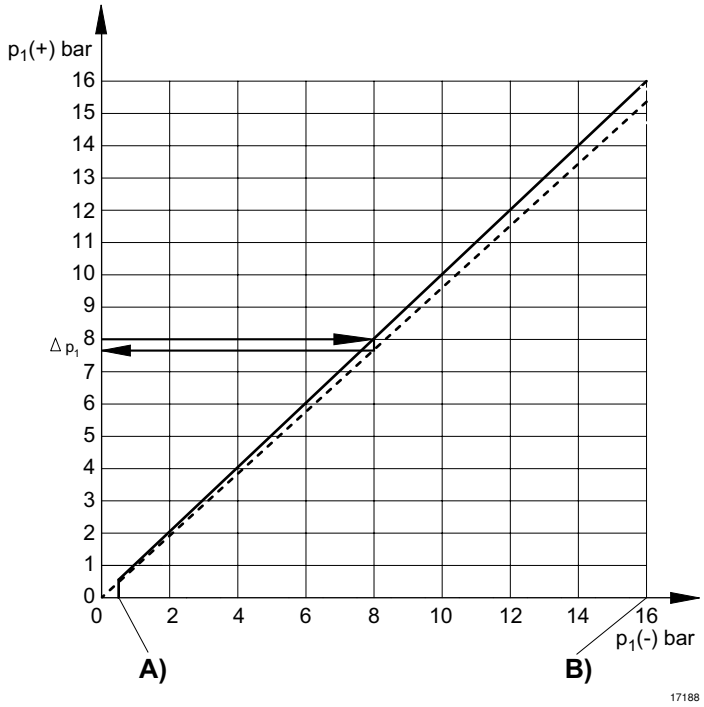

A) p1 (-), min.
B) p1 (-), max.
p1 (+) = upper switching pressure with increasing pressure
p1 (-) = lower switching pressure with decreasing pressure
Δ p1 = max. operating pressure difference or hysteresis
Example:
p1 (+) = 8 bar > p1(-) = 7.6 bar
Δ p1 = 0.4 bar

max. permissible continuous current I max. [A] with ohmic load

U [V]	30											
I [A] 1)	4											
I [A] 2)	3											

reference cycle: 30/min., reference temperature: +30 °C
1) AC
2) DC

max. permissible continuous current I max. [A] with inductive load

U [V]	30											
I [A] 1) 3)	3											
I [A] 2) 4)	2											

reference cycle: 30/min., reference temperature: +30 °C
1) AC
2) DC
3) cos ≈ 0,7 °
4) L/R ≈ 10 ms