Directional valves → Electrically operated

5/3-way valve, Series LS04 AF

► Qn = 170 l/min ► closed center ► pipe connection ► compressed air connection output: 1/8 ″ - 1/4 ″
► Electr. connection: Plug, Industrial plug connector, 2-pin ► Manual override: without detent

00119522

Version	Spool valve, zero overlap
Pilot	internal
Sealing principle	soft sealing
Working pressure min./max.	3 bar / 8 bar
Ambient temperature min./max.	+0 °C / +50 °C
Medium temperature min./max.	+0 °C / +50 °C
Medium	Compressed air
Max. particle size	5 µm
Oil content of compressed air	0 mg/m³ - 5 mg/m³
Protection class acc. to DIN EN 61140 electrically	Class III
Degree of protectionwith electrical connector/plug	IP 50
Protective circuit	Z-diode
Status display LED	Yellow
Duty cycle	100 %
Switch-on time	11 ms
Switch-off time	11 ms
Generic emission standard in accordance with	EN 61000-6-4:2002
Generic immunity standard in accordance with	IEC 61000-6-2:2005
Mounting screw	M3
mounting screw tightening torque	0.5 Nm
Materials:	
Housing	Polyoxymethylene
Seals	Acrylonitrile Butadiene Rubber; Hydrogenated nitrile butadiene rubber; Polyurethane

Technical Remarks
■ The pressure dew point must be at least 15 °C under ambient and medium temperature and may not exceed 3 °C.
■ The oil content of air pressure must remain constant during the life cycle.
■ Use only the approved oils from Bosch Rexroth, see chapter „Technical information“.
■ The product is a part of the EasyHandling system.

Operating voltage	Voltage tolerance	Power consumption
DC	DC	DC
		W
24 V	-10% / +10%	0.7

Directional valves → Electrically operated

5/3-way valve, Series LS04 AF

► Qn = 170 l/min ► closed center ► pipe connection ► compressed air connection output: 1/8 ″ - 1/4 ″
► Electr. connection: Plug, Industrial plug connector, 2-pin ► Manual override: without detent

	MO	Compressed air connection			Operating voltage	Flow conductance	Flow rate value	Weight	Part No.
		Input	Output	Exhaust	DC	C	Qn		
						[l/(s*bar)]	[l/min]	[kg]	
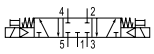		1/8 ″ 1/4 ″	1/8 ″ 1/4 ″	1/8 ″ 1/4 ″	24 V	0.25 0.33	170	0.023	R422101044 R422101045

MO = Manual override
Nominal flow Qn at 6 bar and Δp = 1 bar
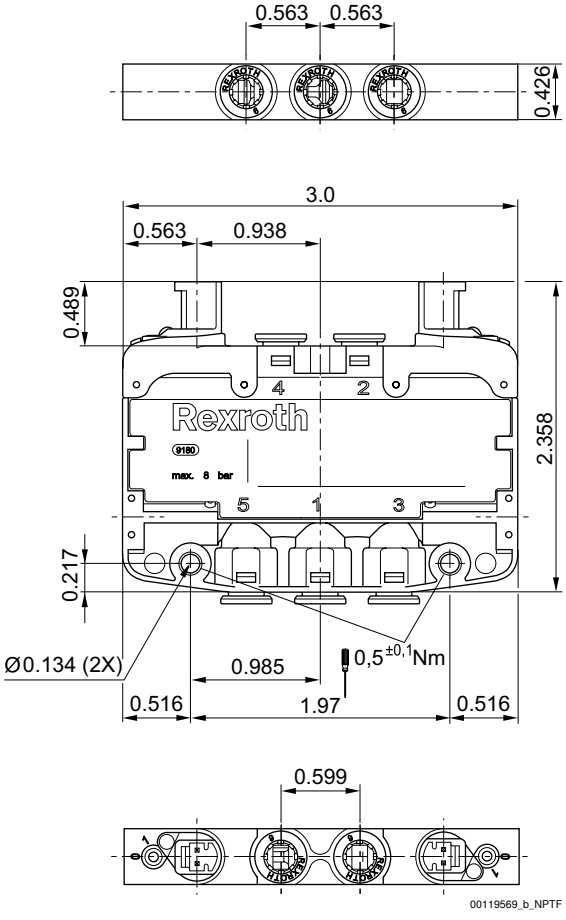
Dimensions