Preparation of compressed air → Supplementary products

Filter, Series MH1-FLA

► 1/4 NPT - 1/2 NPT

17157

Version	Active carbon filter
Mounting orientation	vertical
Working pressure min./max.	0 bar / 17 bar
Medium	Compressed air
Medium temperature min./max.	-30°C / +80°C
Ambient temperature min./max.	-30°C / +80°C
Filter element	exchangeable
Materials:	
Housing	Stainless steel, acid-proof
Reservoir	Stainless steel, acid-proof
Filter insert	Active carbon

Technical Remarks

- The pressure dew point must be at least 15 °C under ambient and medium temperature and may not exceed 3 °C.
- These pneumatic components with NPTF or inch thread dimensions are only available from our US sales organization
- Recommended pre-filtering: 0.01 µm
- max. residual oil content at the outlet: 0.005 mg/m³
- solid impurities in the compressed air at the outlet as per ISO 8573-1: class 0

	Port	Qn	Weight	Note	Part No.
		[l/min]	[kg]		
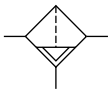	1/4 NPT	170	0.42	Fig. 1	R432034669
	1/2 NPT	680	1.65	Fig. 2	R432034675
Nominal flow Qn at 6.3 bar and Δp = 0.1 bar					

Flow rate characteristic, Fig. 1

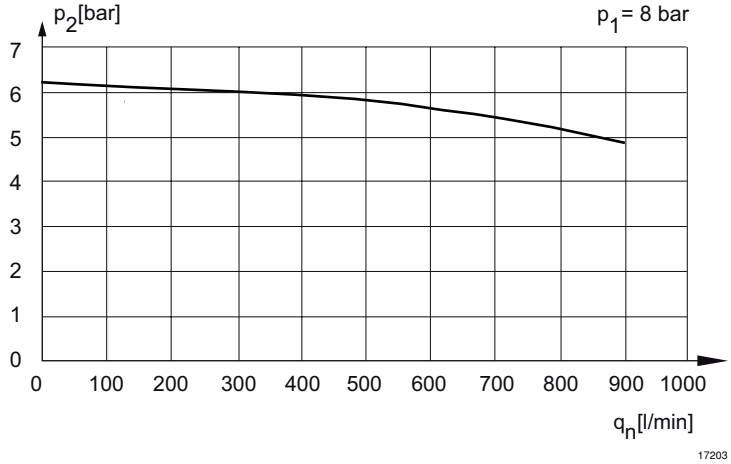

p1 = Working pressure
p2 = Secondary pressure
qn = Nominal flow

Preparation of compressed air → Supplementary products

Filter, Series MH1-FLA

► 1/4 NPT - 1/2 NPT

Flow rate characteristic, Fig. 2

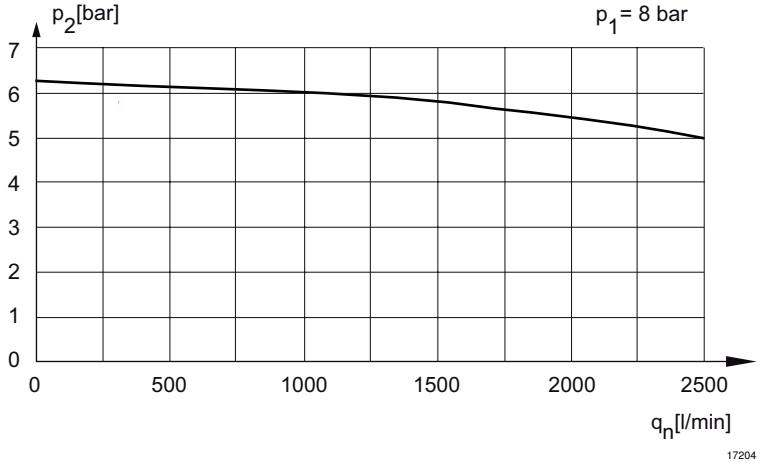

p1 = Working pressure
p2 = Secondary pressure
qn = Nominal flow

Dimensions in inches

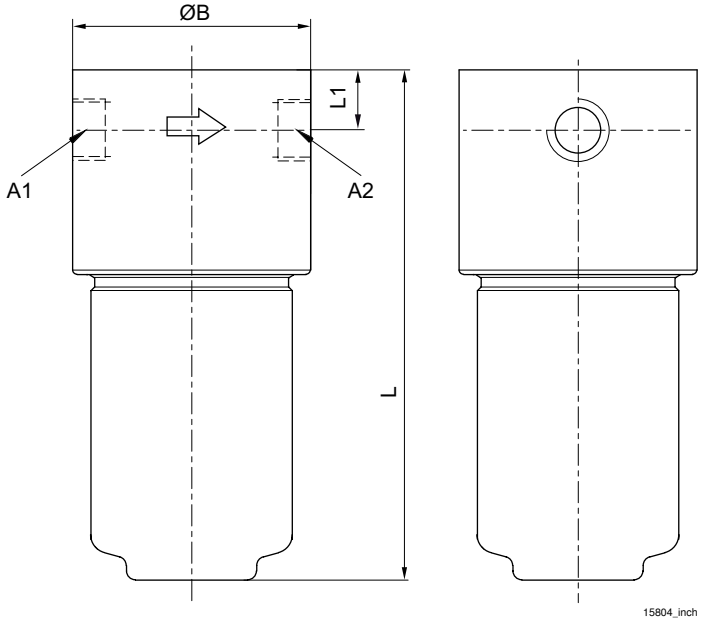

A1 = input
A2 = output

Dimensions in inches

Part No.	A1	A2	L	L1	ØB							
R432034669	1/4 NPT	1/4 NPT	4.8	0.4	1.59							
R432034675	1/2 NPT	1/2 NPT	6	0.69	2.5							