Preparation of compressed air → Maintenance units and components

Pre-filter, Series AS2-FLP

► G 1/4 - G 3/8 ► filter porosity: 0.3 µm ► suitable for ATEX

00127783

ATEX	II 2G2D T4 X
Version	Pre-filter, Can be assembled into blocks
Mounting orientation	vertical
Working pressure min./max.	See table below
Medium	Compressed air
Medium temperature min./max.	-10°C / +50°C
Ambient temperature min./max.	-10°C / +50°C
Filter reservoir volume	12 cm³
Filter element	exchangeable
filter porosity	0.3 µm
Condensate drain	See table below
Materials:	
Housing	Polyamide
Front plate	Acrylonitrile butadiene styrene
Seals	Acrylonitrile Butadiene Rubber
Threaded bushing	Die cast zinc
Filter insert	Impregnated paper

Technical Remarks
■ The pressure dew point must be at least 15 °C under ambient and medium temperature and may not exceed 3 °C.
■ Recommended pre-filtering: 5 µm
■ max. residual oil content at the outlet: 1 mg/m³
■ Max. residual oil content acc. to ISO 8573-4 at the outlet: 100000 1/m³
■ solid impurities in the compressed air at the outlet as per ISO 8573-1: class 2

Preparation of compressed air → Maintenance units and components

Pre-filter, Series AS2-FLP

► G 1/4 - G 3/8 ► filter porosity: 0.3 µm ► suitable for ATEX

	Port	Qn	Working pressure min./max.	Condensate drain	Reservoir	Protective guard	Weight	Part No.
		[l/min]					[kg]	
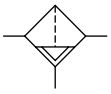	G 1/4	400	1.5 / 16	semi-automatic, open without pressure	Polycarbonate	Polyamide	0.22	**R412006018**
	G 1/4		1.5 / 16	fully automatic, open without pressure	Polycarbonate	Polyamide	0.263	**R412006019**
	G 1/4		0 / 16	fully automatic, closed without pressure	Polycarbonate	Polyamide	0.263	**R412006020**
	G 1/4		1.5 / 16	semi-automatic, open without pressure	Die cast zinc with window	-	0.484	R412006024
	G 1/4		1.5 / 16	fully automatic, open without pressure	Die cast zinc with window	-	0.53	R412006025
	G 1/4		0 / 16	fully automatic, closed without pressure	Die cast zinc with window	-	0.53	R412006026
	G 3/8		1.5 / 16	semi-automatic, open without pressure	Polycarbonate	Polyamide	0.263	**R412006027**
	G 3/8		1.5 / 16	fully automatic, open without pressure	Polycarbonate	Polyamide	0.263	R412006028
	G 3/8		0 / 16	fully automatic, closed without pressure	Polycarbonate	Polyamide	0.263	R412006029
	G 3/8		1.5 / 16	semi-automatic, open without pressure	Die cast zinc with window	-	0.47	R412006033
	G 3/8		1.5 / 16	fully automatic, open without pressure	Die cast zinc with window	-	0.525	R412006034
	G 3/8		0 / 16	fully automatic, closed without pressure	Die cast zinc with window	-	0.525	R412006035
Nominal flow Qn at 6.3 bar and Δp = 0.1 bar								

Flow rate characteristic

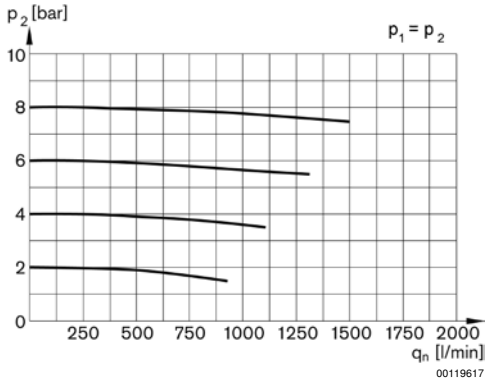

p1 = Working pressure
p2 = Secondary pressure
qn = Nominal flow

Preparation of compressed air → Maintenance units and components

Pre-filter, Series AS2-FLP

► G 1/4 - G 3/8 ► filter porosity: 0.3 µm ► suitable for ATEX

Dimensions

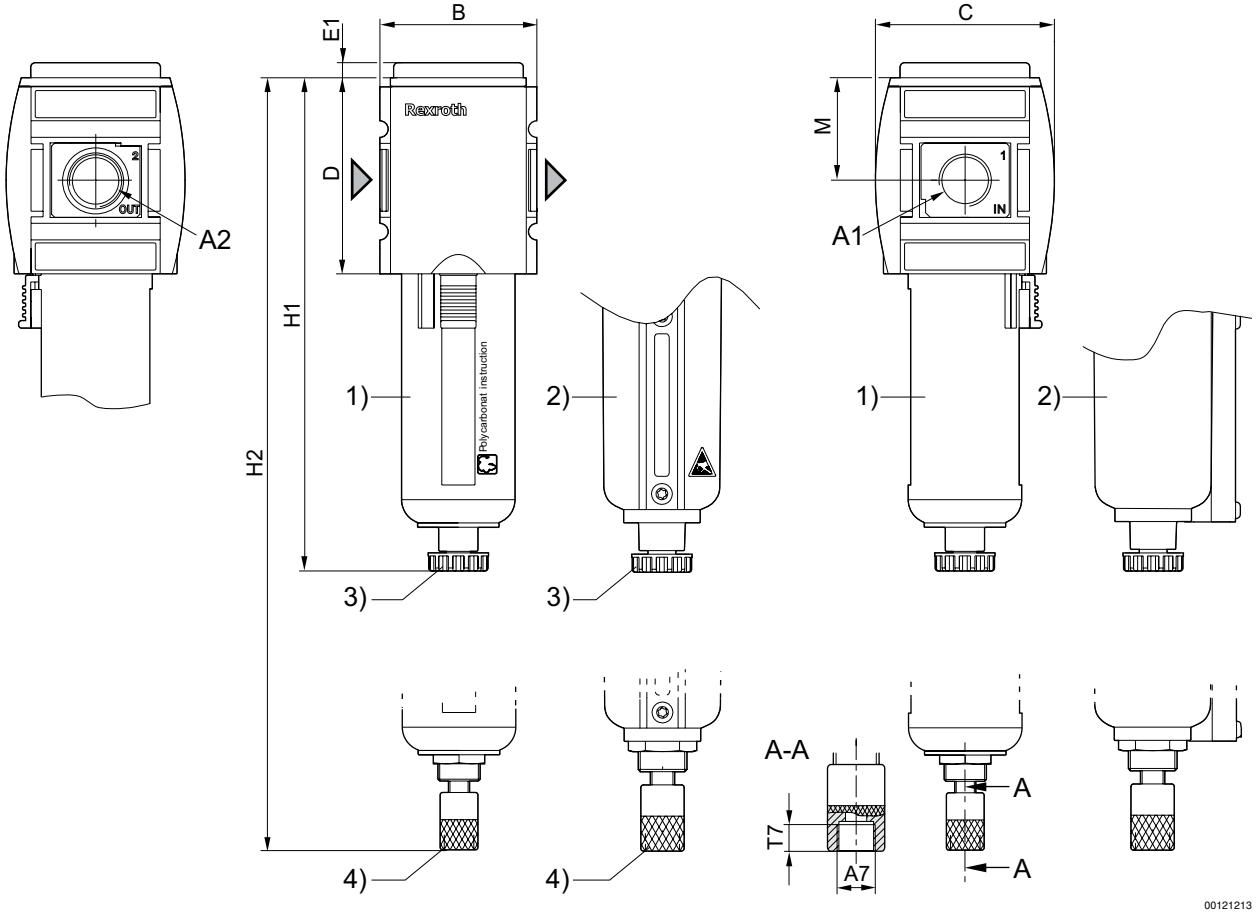

A1 = input
A2 = output
1) Plastic reservoir and protective guard with window
2) Metal reservoir with inspection glass
3) Semi-automatic condensate drain
4) Fully automatic condensate drain

Part No.	A1	A2	A7	B	C	D	E1	H1	H2	M	T7	
R412006018	G 1/4	G 1/4	G 1/8	52	59	65	5	163.5	180.5	34	8.5	
R412006019	G 1/4	G 1/4	G 1/8	52	59	65	5	163.5	180.5	34	8.5	
R412006020	G 1/4	G 1/4	G 1/8	52	59	65	5	163.5	180.5	34	8.5	
R412006024	G 1/4	G 1/4	G 1/8	52	59	65	5	163.5	180.5	34	8.5	
R412006025	G 1/4	G 1/4	G 1/8	52	59	65	5	163.5	180.5	34	8.5	
R412006026	G 1/4	G 1/4	G 1/8	52	59	65	5	163.5	180.5	34	8.5	
R412006027	G 3/8	G 3/8	G 1/8	52	59	65	5	163.5	180.5	34	8.5	
R412006028	G 3/8	G 3/8	G 1/8	52	59	65	5	163.5	180.5	34	8.5	
R412006029	G 3/8	G 3/8	G 1/8	52	59	65	5	163.5	180.5	34	8.5	
R412006033	G 3/8	G 3/8	G 1/8	52	59	65	5	163.5	180.5	34	8.5	
R412006034	G 3/8	G 3/8	G 1/8	52	59	65	5	163.5	180.5	34	8.5	
R412006035	G 3/8	G 3/8	G 1/8	52	59	65	5	163.5	180.5	34	8.5	