Preparation of compressed air → Maintenance units and components

Pressure regulator, Series AS1-RGS-...-E11

► G 1/4 ► Air supply: left ► Qn=1000 l/min ► Activation: manual ► lockable ► With E11 locking

00015786

Mounting orientation	Any
Working pressure min./max.	See table below
Medium	Compressed air
Medium temperature min./max.	-10°C / +50°C
Ambient temperature min./max.	-10°C / +50°C
Regulator type	Diaphragm-type pressure regulator, Can be assembled into blocks
Regulator function	with relieving air exhaust
Adjustment range min./max.	See table below
Materials:	
Housing	Polyamide
Front plate	Acrylonitrile butadiene styrene
Seals	Acrylonitrile Butadiene Rubber

Technical Remarks
■ The pressure dew point must be at least 15 °C under ambient and medium temperature and may not exceed 3 °C.
■ The E11 locking is delivered without a key.

	Port	Qn	Working pressure min./max.	Adjustment range min. - max..	Weight	Part No.
		[l/min]	[bar]	[bar]	[kg]	
	G 1/4	1000	0.5 / 12	0.5 - 10	0.206	**R412010648**
			0.2 / 12	0.2 - 4		R412010649
Max. pressure gauge Ø in blocked state [mm]: 40 Nominal flow Qn at p1 = 6.3 bar and Δp = 1 bar Order pressure gauge separately						

Pressure characteristics curve

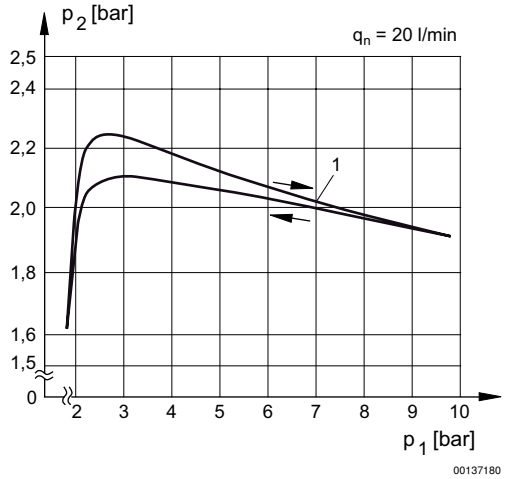

p1 = Working pressure
p2 = Secondary pressure
qn = Nominal flow
1 = Starting point

Preparation of compressed air → Maintenance units and components

Pressure regulator, Series AS1-RGS-...-E11

► G 1/4 ► Air supply: left ► Qn=1000 l/min ► Activation: manual ► lockable ► With E11 locking

Flow rate characteristic

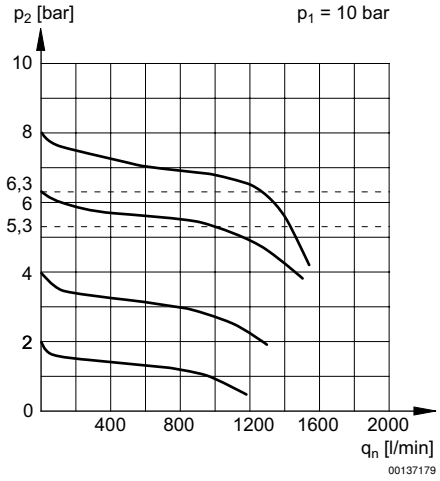

p1 = Working pressure
p2 = Secondary pressure
qn = Nominal flow

Dimensions

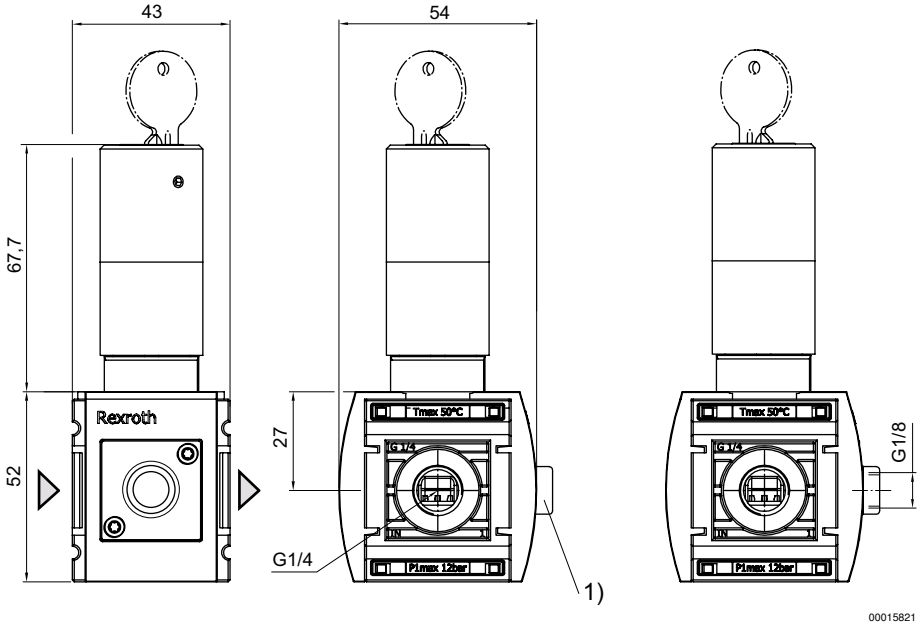

1) Adapter
Order pressure gauge separately