Sensor technologies → Pressure sensors

Pressure sensor, Series PE6

► Operating pressure: -1 - 10 bar ► electronic ► Output signal: 2 x PNP ► electr. connection: Plug, M8x1, 4-pin ► Compressed air connection: Flange with O-ring, Ø 1,2x1 ► with sensor element based on piezo resistance

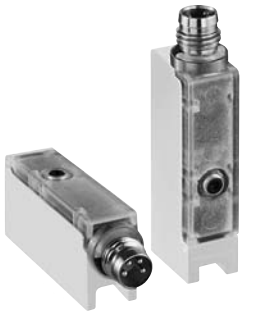

00128532_m

Measurement	Relative pressure
Display	LED
Operating pressure display	2 LED
Switching logic	NO (make contact)
Ambient temperature min./max.	+0°C / +60°C
Medium temperature min./max.	+0°C / +50°C
Medium	Compressed air
Oil content of compressed air	0 mg/m³ / 1 mg/m³
Shock resistance max. (XYZ direction)	10 g
Vibration resistance (XYZ direction)	10 - 55 Hz, 0,1 mm
Precision (% of full scale value)	± 3 %
Repeatability (% of full scale value)	± 1 %
Switching time	< 2 ms
Switching point	adjustable 0-100%
Resetting point	adjustable 0-100%
DC operating voltage min./max.	10 V - 30 V
Local power consumption	<20 mA
Output signal	2 x PNP
DC switching current, max.[A]	0,2
Short circuit resistance	clocking
Mounting types	via flange
Protection class	IP 40
Weight	0.006 kg
Materials:	
Housing	Polycarbonate
Seals	Acrylonitrile Butadiene Rubber
Electr. connection	Brass, nickel-plated

Technical Remarks

- Notice: This product may only be operated with oil-free, dry compressed air.
- Flange plate with screws and seals in scope of delivery

	Type	Operating pressure range min./max.	Protection against overpressure	Note	Part No.
		[bar]			
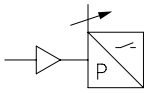	PE6-P2-L HYST FEST	-1 / 0	5 bar	1); 3)	R412007880
	PE6-P2-L HYST EINST	-1 / 0	5 bar	2); 3)	**R412007881**
	PE6-P2-S HYST FEST	-1 / 0	5 bar	1); 4)	R412007882
	PE6-P2-S HYST EINST	-1 / 0	5 bar	2); 4)	**R412007883**
	PE6-P2-L HYST. FEST	0 / 10	15 bar	1); 3)	**R412007884**
	PE6-P2-L HYST. EINST	0 / 10	15 bar	2); 3)	**R412007885**
	PE6-P2-S HYST. FEST	0 / 10	15 bar	1); 4)	**R412007886**
	PE6-P2-S HYST. EINST	0 / 10	15 bar	2); 4)	**R412007887**

1) Hysteresis: 2% of the final value, fixed
2) Hysteresis: adjustable
3) Mounting orientation: L (horizontal)
4) Mounting orientation: S (vertical)

Sensor technologies → Pressure sensors

Pressure sensor, Series PE6

► Operating pressure: -1 - 10 bar ► electronic ► Output signal: 2 x PNP ► electr. connection: Plug, M8x1, 4-pin
► Compressed air connection: Flange with O-ring, Ø 1,2x1 ► with sensor element based on piezo resistance

PE6...-L

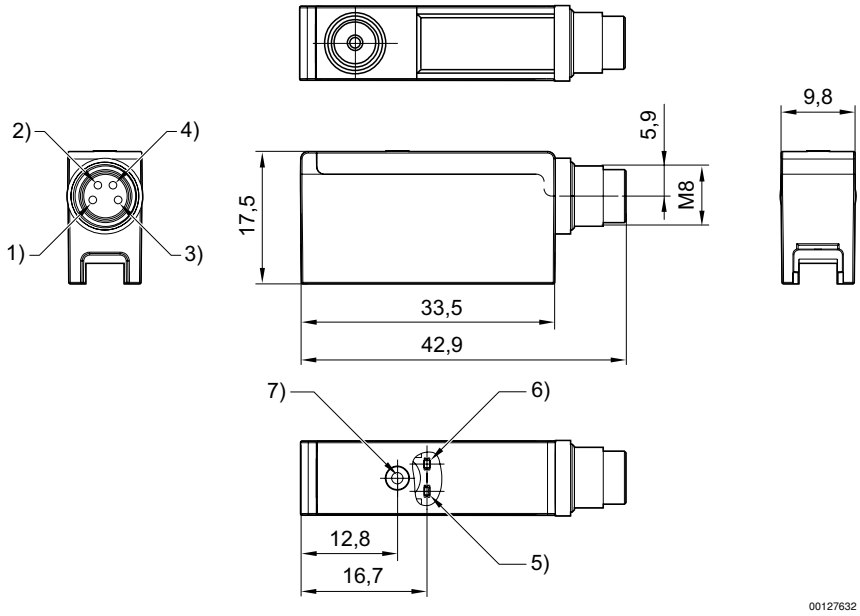

1) +UB
2) Switch output 2
3) GND
4) Switch output 1
5) LED for switch output 2
6) LED for switch output 1
7) setting knob

PE6...-S

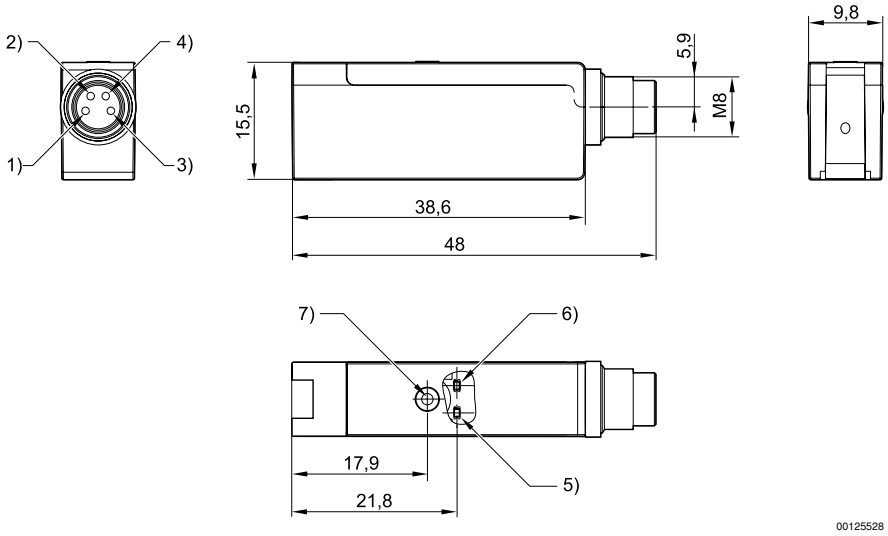

1) +UB
2) Switch output 2
3) GND
4) Switch output 1
5) LED for switch output 2
6) LED for switch output 1
7) setting knob

Sensor technologies → Pressure sensors

Pressure sensor, Series PE6

► Operating pressure: -1 - 10 bar ► electronic ► Output signal: 2 x PNP ► electr. connection: Plug, M8x1, 4-pin ► Compressed air connection: Flange with O-ring, Ø 1,2x1 ► with sensor element based on piezo resistance

Pressure sensor, PE6...-L

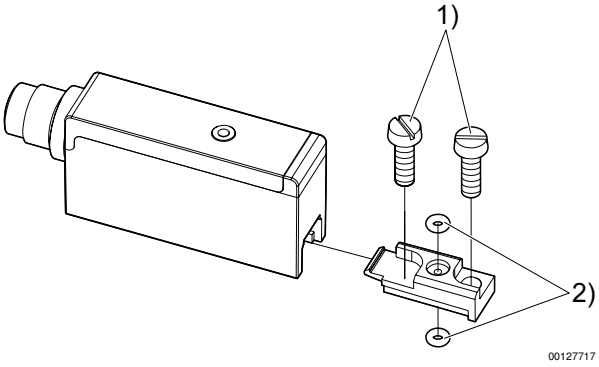

1) Cylinder screw M2,5x8
2) O-ring Ø1,2x1 (included)

Pressure sensor, PE6...-S

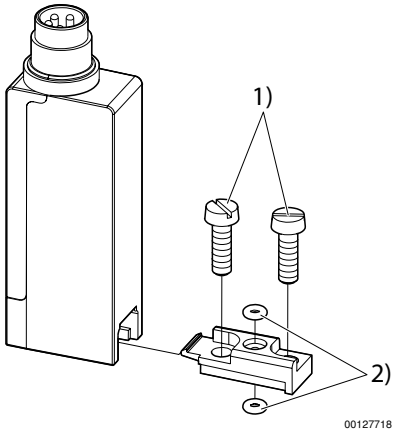

1) Cylinder screw M2,5x8
2) O-ring Ø1,2x1 (included)

Flange plate, PE6

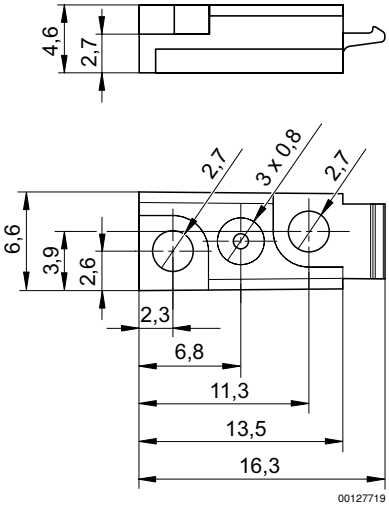

Pressure sensor, Series PE6

► Operating pressure: -1 - 10 bar ► electronic ► Output signal: 2 x PNP ► electr. connection: Plug, M8x1, 4-pin ► Compressed air connection: Flange with O-ring, Ø 1,2x1 ► with sensor element based on piezo resistance

Block diagram

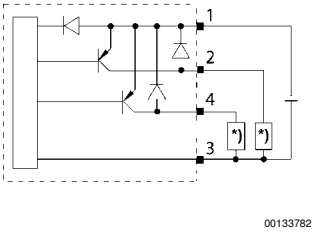

* Storable postion

Switching function (fixed hysteresis)

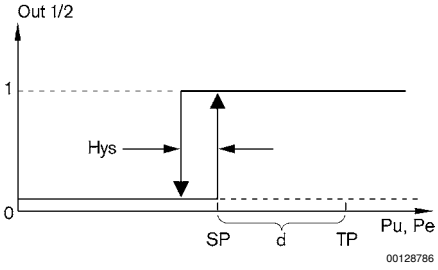

Vacuum sensor: d=20%
Pressure sensor: d=5%
SP = switch-on point, TP = teach point
OUT: switch output
Pu = pressure < 0 - vacuum sensor
Pe = pressure > 0 - pressure sensor

Switching function (adjustable hysteresis)

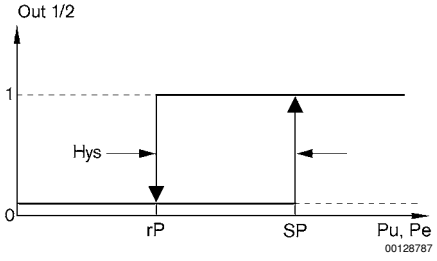

SP = switch-on point, rP = resetting point
OUT: switch output
Pu = pressure < 0 - vacuum sensor
Pe = pressure > 0 - pressure sensor