Piston rod cylinder →

Mini cylinder, ISO 6432, Series OCT

► Ø 12 - 25 mm ► Ports: Ø 4 - Ø 6 ► double-acting ► with magnetic piston ► cushioning: pneumatically, adjustable ► with integrated rear eye ► Piston rod: external thread

00118480

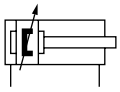

a15

Standards	ISO 6432
Compressed air connection	push-in fitting
Working pressure min./max.	1.5 bar / 10 bar
Ambient temperature min./max.	-20°C / +75°C
Medium temperature min./max.	-20°C / +75°C
Medium	Compressed air
Max. particle size	50 µm
Oil content of compressed air	0 mg/m³ - 5 mg/m³
Pressure for determining piston forces	6,3 bar

Materials:	
Cylinder tube	Aluminum, anodized
Piston rod	Stainless steel
Front cover	Polyarylamide
End cover	Polyarylamide
Seal	Polyurethane
Nut for cylinder mounting	Aluminum, anodized
Nut for piston rod	Stainless steel
Scraper	Polyester urethane rubber

Technical Remarks

- The pressure dew point must be at least 15 °C under ambient and medium temperature and may not exceed 3 °C.
- The oil content of compressed air must remain constant during the life cycle.
- Use only the approved oils from Bosch Rexroth, see chapter „Technical information“.
- Clamping piece for magnetic field sensor necessary

Piston Ø		**[mm]**	**12**	**16**	**20**	**25**
Retracting piston force		[N]	64	130	195	259
Extracting piston force		[N]	81	148	227	309
Cushioning length		[mm]	10	10	13	16
Cushioning energy		[J]	0.5	0.6	1.5	2.3
Weight	0 mm stroke	[kg]	0.058	0.07	0.122	0.168
	+10 mm stroke	[kg]	0.007	0.0067	0.009	0.012
Stroke max.		[mm]	600	950	1100	1300

Supplementary products
Part numbers marked in bold are available from the central warehouse in Germany, see the shopping basket for more detailed information
Pneumatics catalog, online PDF, as of 2013-04-22, © Bosch Rexroth AG, subject to change

Piston rod cylinder →

Mini cylinder, ISO 6432, Series OCT

► Ø 12 - 25 mm ► Ports: Ø 4 - Ø 6 ► double-acting ► with magnetic piston ► cushioning: pneumatically, adjustable ► with integrated rear eye ► Piston rod: external thread

	Piston Ø Piston rod thread Ports Cylinder outer thread	12 M6 Ø 4 M16x1,5	16 M6 Ø 4 M16x1,5	20 M8 Ø 6 M22x1,5	25 M10x1,25 Ø 6 M22x1,5	
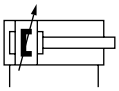	Stroke 10	R480049564	5283100020	5284100020	5285100020	
	25	R480049567	5283100050	5284100050	5285100050	
	50	R480049570	5283100100	**5284100100**	**5285100100**	
	80	R480049574	5283100160	5284100160	**5285100160**	
	100	R480049575	**5283100200**	5284100200	5285100200	
	125	R480049576	5283100250	5284100250	5285100250	
	160	R480049578	5283100320	5284100320	5285100320	
	200	R480049579	5283100400	5284100400	5285100400	
	250	R480049580	5283100500	5284100500	5285100500	
	320	R480049582	5283100640	5284100640	5285100640	
	400	R480049583	5283100800	5284100800	5285100800	
	500	R480049584	5283101000	5284101000	5285101000	

Configurable product	
	This product is configurable. Please use our Internet configurator at www.boschrexroth.com/pneumatics or contact the nearest Bosch Rexroth sales office.

Piston Ø 12 - 25

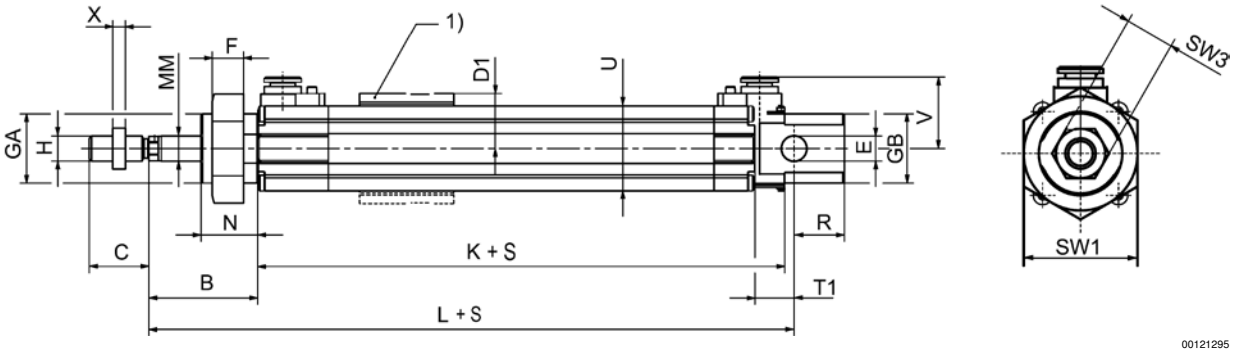

Piston Ø 12

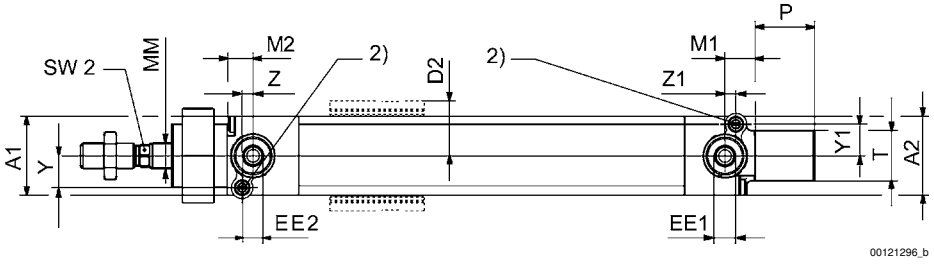

Piston rod cylinder →

Mini cylinder, ISO 6432, Series OCT

► Ø 12 - 25 mm ► Ports: Ø 4 - Ø 6 ► double-acting ► with magnetic piston ► cushioning: pneumatically, adjustable ► with integrated rear eye ► Piston rod: external thread

Piston Ø 16 - 25

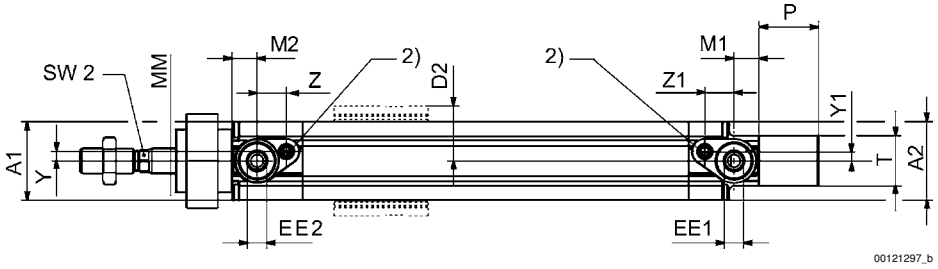

1) Clamp for sensor - installation at all 4 cylinder sides (Ø 12 mm at 3 sides) possible
2) Slot for cushioning screw 0.8 mm
S = stroke

Piston Ø	A1/A2	B	C –2	D1/D2	E H9	EE1/EE2	F	GA/GB	H	K	L	M1/M2
12	19	22	15	14.5	6	Ø 4	8	M16x1,5	M6	46	75	8
16	21	22	15	15.5	6	Ø 4	8	M16x1,5	M6	56	82	6
20	25	24	19	17.5	8	Ø 6	10	M22x1,5	M8	68	95	8
25	28.5	28	21	19.25	8	Ø 6	10	M22x1,5	M10x1,25	70	104	8

Piston Ø	MM	N	P	R	T d13	T1	U	V	X	SW1	SW2	SW3	Z/Z1
12	6	17	17	10	12	9	19	19.2	3.2	22	5	10	2.5
16	6	16	17	13	12	9	23	20.5	3	22	5	10	6.6
20	8	18	19	16	16	12.5	27	22.7	4	30	7	13	9.3
25	10	21	21	15	16	12.5	30	24	5	30	9	17	9.3

Piston Ø	Y/Y1												
12	7												
16	2.4												
20	3												
25	3												