Directional valves → Electrically operated

2x3/2-way valve, Series TC15

► Qn = 1100 l/min ► pipe connection ► compressed air connection output: G 1/4 ► Electr. connection: Plug, M8, 3-pin ► Manual override: with detent ► double solenoid

00137992

Version	Spool valve, zero overlap
Pilot	external, internal
Sealing principle	soft sealing
Mounting on manifold strip	P-strip
Working pressure min./max.	See table below
Control pressure min./max.	3 bar / 10 bar
Ambient temperature min./max.	-10°C / +50°C
Medium temperature min./max.	-10°C / +50°C
Medium	Compressed air
Max. particle size	5 µm
Oil content of compressed air	0 mg/m³ - 5 mg/m³
Compressed air connection	according to ISO 228-1
Connector standard	IEC 60950-1
Protection class acc. to DIN EN 61140 electrically	Class III
Degree of protectionwith electrical connector/plug	IP 65
Status display LED	Yellow
Duty cycle	100 %
Switch-on time	12 ms
Switch-off time	16 ms
mounting screw tightening torque	2.5 Nm
Tightening torque tolerance	±0,2
Weight	0.279 kg
Materials:	
Housing	Polyamide, fiber-glass reinforced
Seals	Acrylonitrile Butadiene Rubber; Hydrogenated nitrile butadiene rubber
Front plate	Polyamide, fiber-glass reinforced
Threaded bushing	Brass, chrome-plated; Die cast zinc, nickel-plated

Technical Remarks
■ The pressure dew point must be at least 15 °C under ambient and medium temperature and may not exceed 3 °C.
■ The oil content of compressed air must remain constant during the life cycle.
■ Use only the approved oils from Bosch Rexroth, see chapter „Technical information“.

Operating voltage	Voltage tolerance	Power consumption
DC	DC	DC
		W
24 V	-10% / +10%	2.2

Directional valves → Electrically operated

2x3/2-way valve, Series TC15

► Qn = 1100 l/min ► pipe connection ► compressed air connection output: G 1/4 ► Electr. connection: Plug, M8, 3-pin ► Manual override: with detent ► double solenoid

		MO	Compressed air connection				Operating voltage	Flow conductance		Flow rate value	Part No.
			Input	Output	Exhaust	Pilot connection	DC	b	C	Qn	
									[l/(s*bar)]	[l/min]	
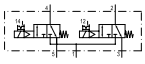	NC/ NC		G 1/4	G 1/4	G 1/4	-	24 V	0.25	5.9	1100	R422102190
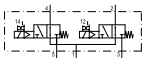	NO/ NO		G 1/4	G 1/4	G 1/4	-	24 V	0.25	5.9	1100	R422102191
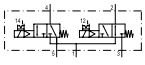	NC/ NO		G 1/4	G 1/4	G 1/4	-	24 V	0.25	5.9	1100	R422102192
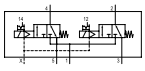	NC/ NC		G 1/4	G 1/4	G 1/4	M5	24 V	0.25	5.9	1100	R422102193
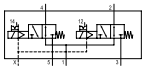	NO/ NO		G 1/4	G 1/4	G 1/4	M5	24 V	0.25	5.9	1100	R422102194
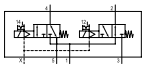	NC/ NO		G 1/4	G 1/4	G 1/4	M5	24 V	0.25	5.9	1100	R422102195

Part No.	Nominal resistance	Working pressure min./max.
		[bar]
R422102190	280	3 / 10
R422102191	280	3 / 10
R422102192	280	3 / 10
R422102193	280	-0.9 / 10
R422102194	280	-0.9 / 10
R422102195	280	-0.9 / 10

MO = Manual override
Nominal flow Qn at 6 bar and Δp = 1 bar

Directional valves → Electrically operated

2x3/2-way valve, Series TC15

► Qn = 1100 l/min ► pipe connection ► compressed air connection output: G 1/4 ► Electr. connection: Plug, M8, 3-pin ► Manual override: with detent ► double solenoid

Dimensions

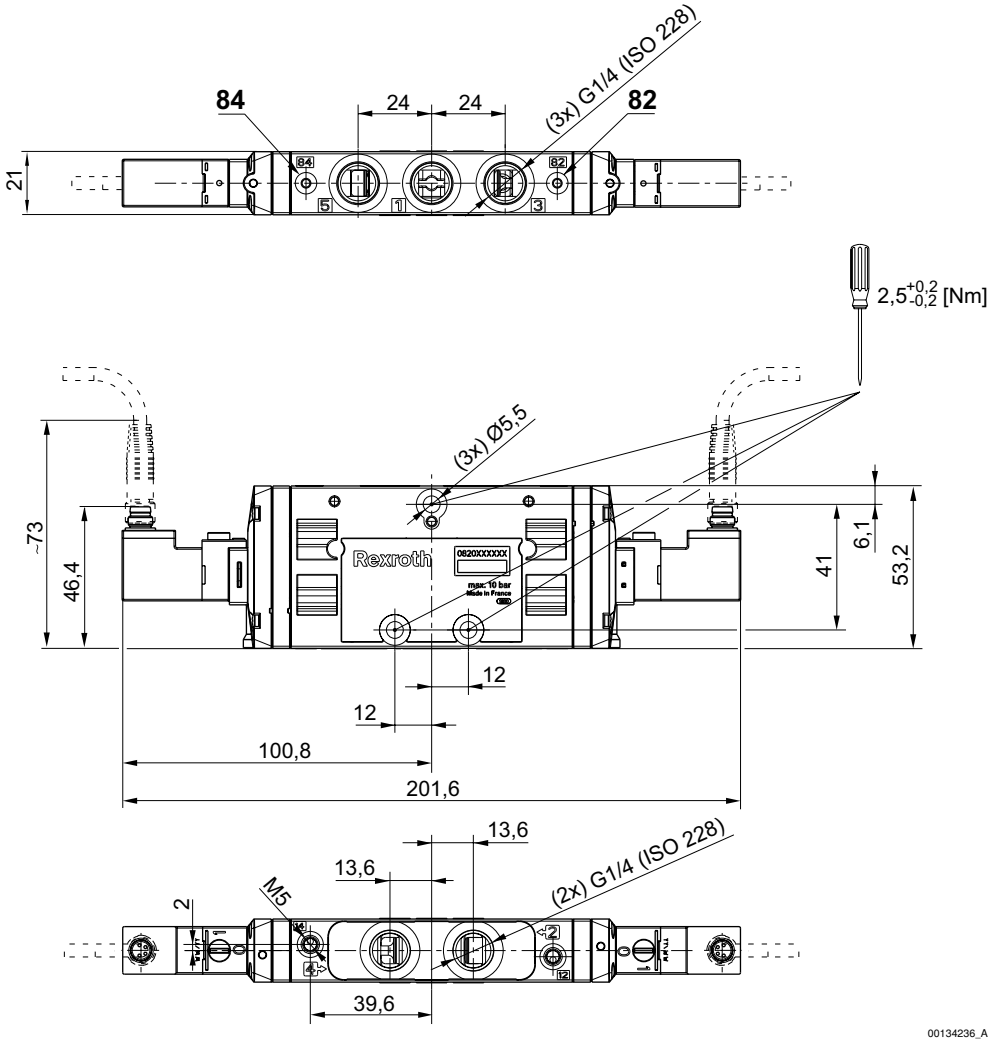

Directional valves → Electrically operated

2x3/2-way valve, Series TC15

► Qn = 1100 l/min ► pipe connection ► compressed air connection output: G 1/4 ► Electr. connection: Plug, M8, 3-pin ► Manual override: with detent ► double solenoid

PIN assignment and cable colors for electrical connector

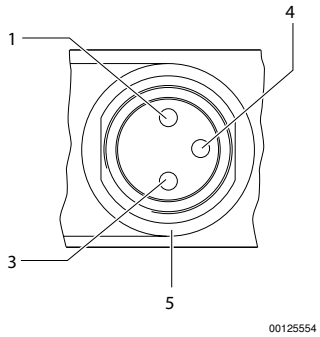

PIN assignment:
1) PIN not assigned
3) 0 V
4) 24 V
5) LED
Cable color
1) Brown
3) Blue
4) Black
Note: Bi-polar protective circuit to prevent overvoltage