Electrical connection technologies → Supplementary products

Contact bridges with cable

► Control: via a cable (tin-plated wire end) ► Number of solenoid coils: 1

P576_313_b

Ambient temperature min./max.	-15°C / +50°C
Protection class	IP 65
Protective circuit	43 V uni-directional
Operating voltageDC	24 V
Voltage tolerance DC	-20% / +20%
Valve LED status display	Yellow
Mounting screw	M2.5 with slot
Tightening torque for mounting screws [+0,05]	0.25 Nm
Materials:	
Housing	Polyester amide
Cable	Polyurethane
Seals	Fluorocaoutchouc

The delivered product may vary from that in the illustration.

Technical Remarks
■ In combination, 5763533113 and 5763533103 can control up to 8 solenoid coils.Position 1: 5763533113 Positions 2-8: 5763533103

Port		Cable length	Cable-Ø	n-Wire	Wire cross-section	Weight	Fig.	Part No.
power supply	to valve							
		[m]	[mm]		[mm²]	[kg]		
without wire end ferrule, tin-plated, with cable	Electrical connector, ISO 15217, form C	5	4.8	9	0.128	0.2	Fig. 1	5763533113
Plug, mini-DIN, 8-pin	Electrical connector, ISO 15217, form C	0.2	4.8	-	0.14	0.037	Fig. 2	**5763533103**

Electrical connection technologies → Supplementary products

Contact bridges with cable

► Control: via a cable (tin-plated wire end) ► Number of solenoid coils: 1

Fig. 1

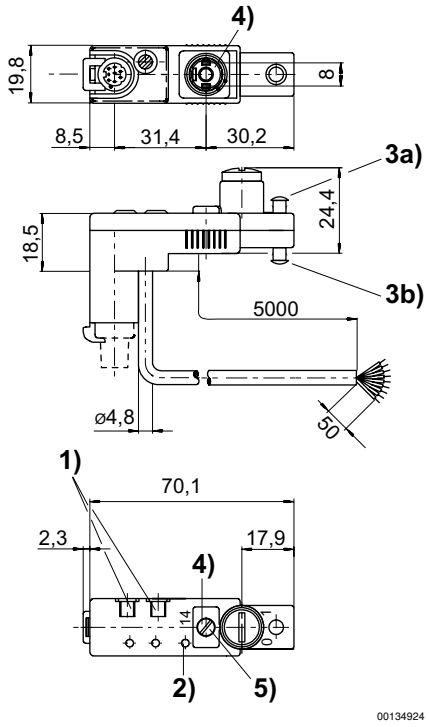

1) mounting space for name plate
2) Valve LED
3a) sealing cap for manual override, not removable
3b) sealing cap for manual override, removable
4) captive seal and screw
5) Tightening torque for mounting screws: 0,25 Nm + 0,05
6) additional possibility of grounding

Wire allocation:
Black = magnet 1
Brown = magnet 2
Orange = magnet 3
Yellow = magnet 4
Green = magnet 5
Purple = magnet 6
White = magnet 7
Pink = magnet 8
Blue = ground