**Flow and check valves → Supplementary products**

# Pneumatic presetting counter (add)

**► 5-digit, 3 digits ► Compressed air connection input: M5 - Ø 4 ► compressed air connection output: M5 - Ø 4**

B0000208

| | |
|---|---|
| Logic function | Pneumatic/mechanic counter, adding, with fixed pre-selection |
| Working pressure min./max. | 2 bar / 8 bar |
| Ambient temperature min./max. | +0°C / +60°C |
| Medium temperature min./max. | +0°C / +60°C |
| Medium | Compressed air |
| Max. particle size | 40 µm |
| Oil content of compressed air | 0 mg/m³ - 1 mg/m³ |
| Mounting orientation | Any |
| Materials: | |
| Housing | See table below |
| Threaded bushing | See table below |

| Technical Remarks |
|---|
| ■ The pressure dew point must be at least 15 °C under ambient and medium temperature and may not exceed 3 °C. |

| | Display | Return | Compressed air connection | | Pulse duration | | Pause duration | | Weight | Fig. | Part No. |
|---|---|---|---|---|---|---|---|---|---|---|---|
| | | | Input | Output | Count-ing | Return | Count-ing | Return | | | |
| | | | | | | | | | [kg] | | |
| 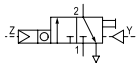 | 5-digit<br>5-digit<br>3 digits<br>3 digits | Pneumatic > 2 bar, Manually via a button | M5<br>Ø 4<br>M5<br>Ø 4 | M5<br>Ø 4<br>M5<br>Ø 4 | > 8 ms | > 180 ms | > 10 ms | > 50 ms | 0.16 | Fig. 1<br>Fig. 1<br>Fig. 2<br>Fig. 2 | **0821304008**<br>**0821304009**<br>0821304014<br>**0821304015** |
| 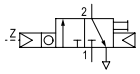 | 5-digit | Automatic, Manually via a button | M5<br>Ø 4 | M5<br>Ø 4 | > 8 ms | > 180 ms | > 10 ms | > 50 ms | 0.19 | Fig. 3 | 0821304016<br>0821304017 |
| NC | | | | | | | | | | | |

**Counting frequency**

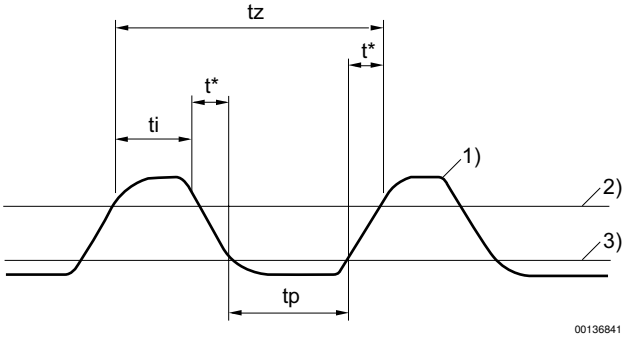


1) Counting impulse
2) Response pressure - 0.8 bar
3) Release pressure - 0.15 bar
ti = min. pulse duration
tp = min. pause duration
tz = time for counting pulse = ti + tp + 2t*
t* = dependent on pressure and pipe length (values must be determined)

**Flow and check valves → Supplementary products**

## Pneumatic presetting counter (add)

**► 5-digit, 3 digits ► Compressed air connection input: M5 - Ø 4 ► compressed air connection output: M5 - Ø 4**

**Fig. 1**

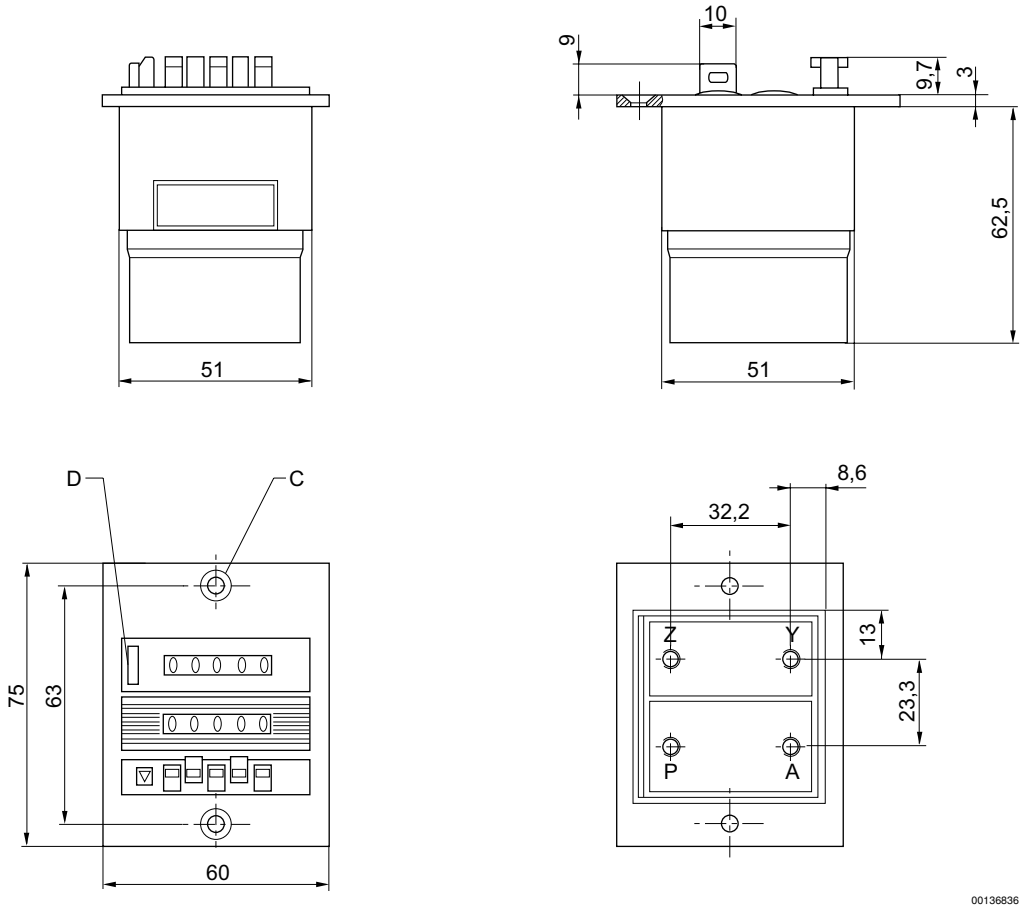


P (1) = compressed air connection
Z = counting signal
Y = return signal
A (2) = output signal
C = countersink DIN 74-Af4
D = reset key
Included in the delivery contents:
2 oval head countersunk screws DIN 966 St M4 x 16
2 spring rings A4 DIN 124
2 hexagonal nuts M4 DIN 934

**Flow and check valves → Supplementary products**

## Pneumatic presetting counter (add)

**► 5-digit, 3 digits ► Compressed air connection input: M5 - Ø 4 ► compressed air connection output: M5 - Ø 4**

**Fig. 2**

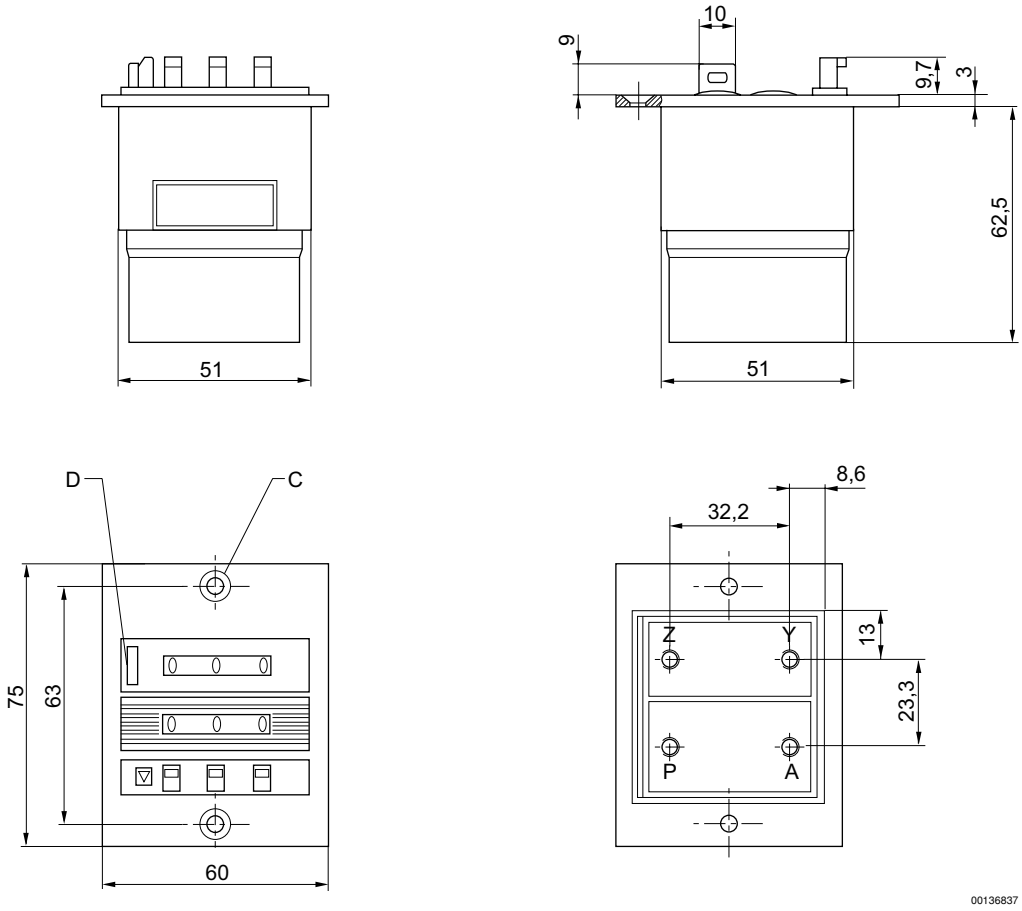


P (1) = compressed air connection
Z = counting signal
Y = return signal
A (2) = output signal
C = countersink DIN 74-Af4
D = reset key
Included in the delivery contents:
2 oval head countersunk screws DIN 966 St M4 x 16
2 spring rings A4 DIN 124
2 hexagonal nuts M4 DIN 934

**Flow and check valves → Supplementary products**

## Pneumatic presetting counter (add)

**► 5-digit, 3 digits ► Compressed air connection input: M5 - Ø 4 ► compressed air connection output: M5 - Ø 4**

**Fig. 3**

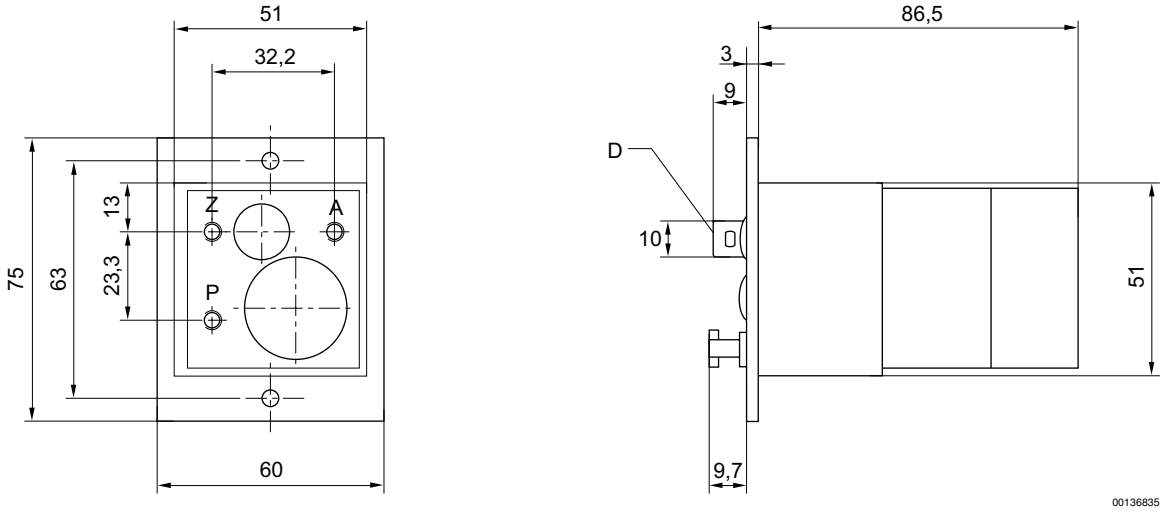


P (1) = compressed air connection
Z = counting signal
A (2) = output signal
D = reset key
Included in the delivery contents:
2 oval head countersunk screws DIN 966 St M4 x 16
2 spring rings A4 DIN 127
2 hexagonal nuts M4 DIN 934