Electrical connection technologies → Electrical connection technologies

Electrical connectors with cable, Series CN1

► ISO 15217:2000 ► with cable ► form C

P894_018

Ambient temperature min./max.	-20°C / +80°C
Protection class	IP 67
Tightening torque for mounting screws	0.4 Nm
Materials:	
Seals	caoutchouc/butadiene caoutchouc

	Operating voltage		Max. current	Protective circuit	Contact assignment	LED status display	Cable length L	Part No.
	[V DC]	[V AC]	[A]				[m]	
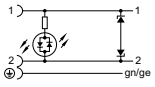	24	24	6	Z-diode	2+E	Yellow	3	**1834484204**
							3	**1834484205**
							5	**1834484206**
							5	**1834484207**
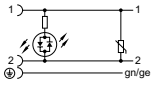	230	230	6	Varistor	2+E	Yellow	3	**1834484208**
							3	**1834484209**
							5	**1834484210**
							5	**1834484211**
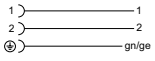	230	230	6	-	2+E	-	3	**1834484212**
							3	**1834484213**
							5	**1834484214**
							5	**1834484215**

Part No.	Weight	Fig.	Note
	[kg]		
1834484204	0.185	Fig. 1	1)
1834484205	0.185	Fig. 2	
1834484206	0.292	Fig. 1	
1834484207	0.298	Fig. 2	
1834484208	0.171	Fig. 3	1)
1834484209	0.194	Fig. 4	
1834484210	0.297	Fig. 3	
1834484211	0.285	Fig. 4	
1834484212	0.183	Fig. 1	-
1834484213	0.183	Fig. 2	
1834484214	0.308	Fig. 1	
1834484215	0.308	Fig. 2	

1) Flat gasket

Electrical connectors with cable, Series CN1

► ISO 15217:2000 ► with cable ► form C

Fig. 1

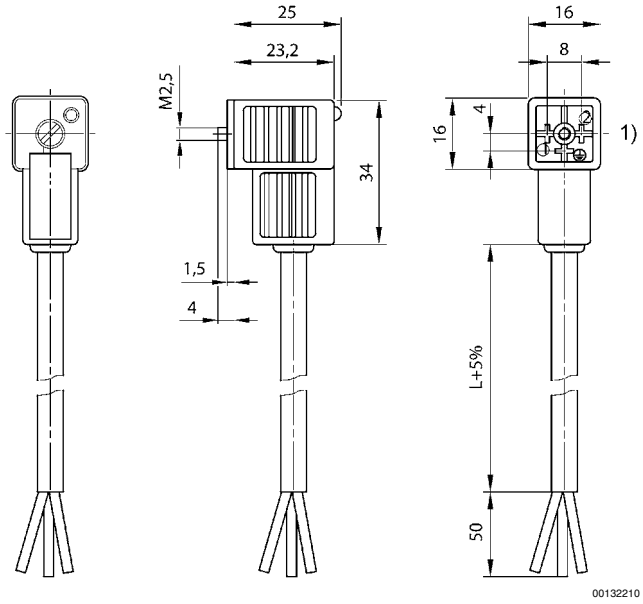

1) 0° female insert

Fig. 2

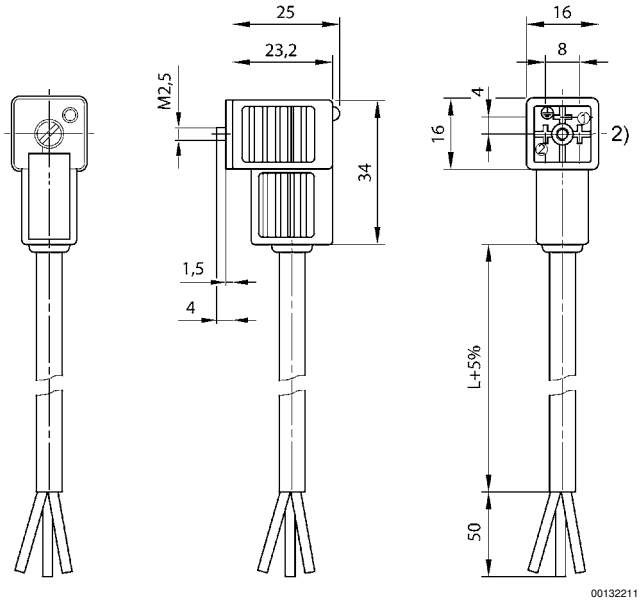

2) 180° female insert