Preparation of compressed air → Maintenance units and components

Distributor, Series AS1-DIN

► G 1/4 ► Air supply: left ► Distributor 1x ► Non-return valve

00137240

Version	Non-return valve, Can be assembled into blocks
Mounting orientation	Any
Working pressure min./max.	0 bar / 12 bar
Medium	Compressed air
Medium temperature min./max.	-10°C / +50°C
Ambient temperature min./max.	-10°C / +50°C
Materials:	
Housing	Polyamide
Front plate	Acrylonitrile butadiene styrene
Seals	Acrylonitrile Butadiene Rubber

	Port	Qn		Weight	Part No.
		1►2	1►5		
		[l/min]		[kg]	
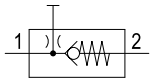	G 1/4	800	1000	0.178	R412014663
Nominal flow Qn at p1 = 6.3 bar and Δp = 1 bar					

Flow rate characteristic

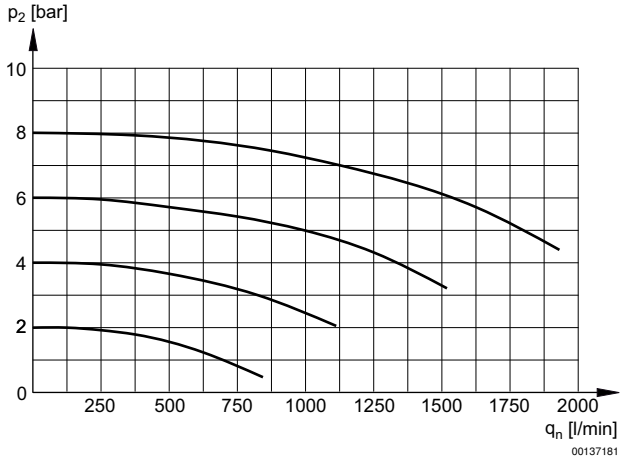

00137181

Nominal flow 1 -> 2
p2 = secondary pressure
qn = nominal flow

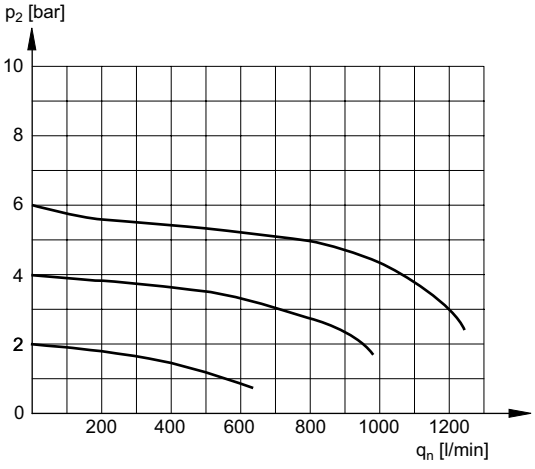

00137182

Nominal flow 1 -> 3
p2 = secondary pressure
qn = nominal flow

Preparation of compressed air → Maintenance units and components

Distributor, Series AS1-DIN

► G 1/4 ► Air supply: left ► Distributor 1x ► Non-return valve

Dimensions

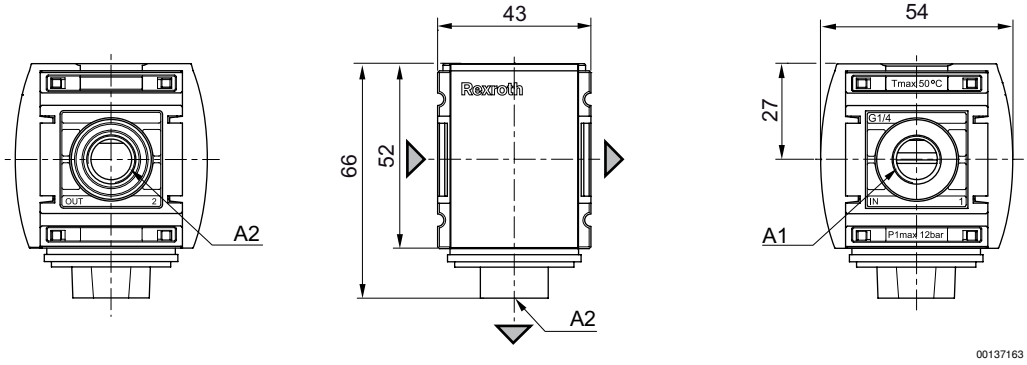

A1 = input
A2 = output