Preparation of compressed air → Maintenance units and components

Filling unit, electrically operated, Series AS1-SSU

► G 1/4 ► Air supply: left ► pipe connection

00137268

Parts	3/2-way valve, electrically operated, Filling valve
Version	Poppet valve, Can be assembled into blocks
Working pressure min./max.	2.5 bar / 10 bar
Medium	Compressed air
Medium temperature min./max.	-10°C / +50°C
Ambient temperature min./max.	-10°C / +50°C
Pilot	internal
Sealing principle	soft sealing
Max. particle size	25 µm
Degree of protection,with Plug	IP 65
Duty cycle	100 %
Materials:	
Housing	Polyamide
Front plate	Acrylonitrile butadiene styrene
Seals	Acrylonitrile Butadiene Rubber
Threaded bushing	Die cast zinc

Technical Remarks

- The pressure dew point must be at least 15 °C under ambient and medium temperature and may not exceed 3 °C.
- Builds up pressure slowly in the pneumatic systems, i.e. prevents a sudden pressure build-up during a restart after a mains pressure failure or avoids emergency OFF switching. This also avoids dangerous, jerky cylinder movements.

Operating voltage	Power consumption
DC	DC
	W
24 V	2

		Port	Exhaust	Operating voltage	Qn			Weight	Fig.	Note	Part No.
				DC		1►2	2►3				
							[l/min]	[kg]			
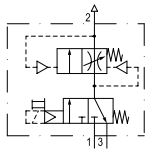		G 1/4	G 1/4	24 V	1300	1300	380	0.36 0.377	Fig. 1 Fig. 2	1) 2)	**R412010484** R412010682

1) Electr. connection: ISO 15217, form C
2) Electr. connection: M12
Basic valve with pilot valve
Manual override: without detent
Nominal flow Qn at p1 = 6.3 bar and Δp = 1 bar

Preparation of compressed air → Maintenance units and components

Filling unit, electrically operated, Series AS1-SSU

► G 1/4 ► Air supply: left ► pipe connection

Flow rate characteristic

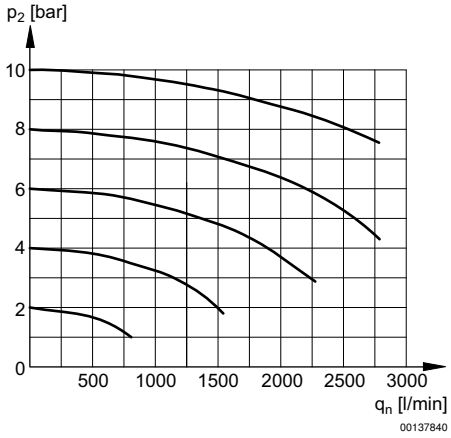

p2 = secondary pressure
qn = nominal flow

Fig. 1: Filling unit with pilot valve and port for electrical connector form C

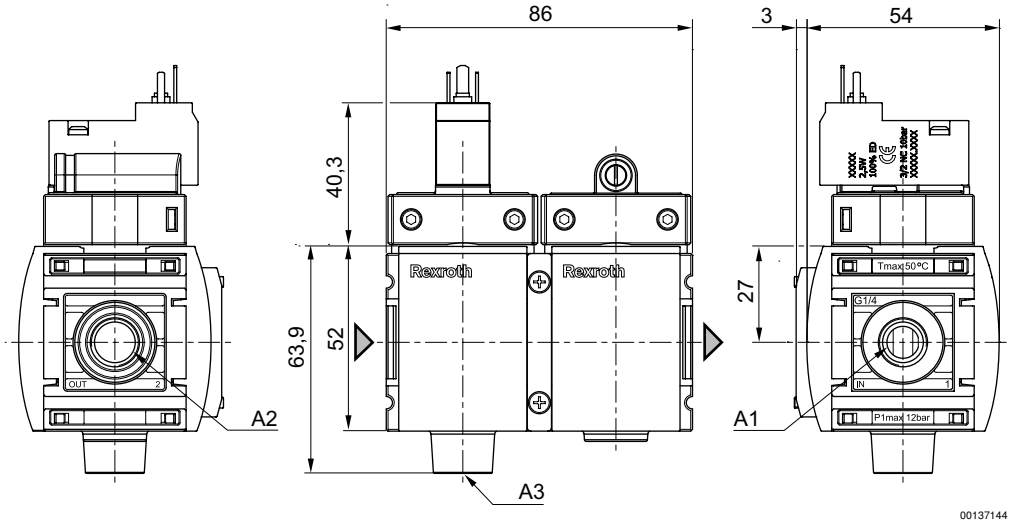

A1 = input
A2 = output
A3 = ventilation port

Preparation of compressed air → Maintenance units and components

Filling unit, electrically operated, Series AS1-SSU

► G 1/4 ► Air supply: left ► pipe connection

Fig. 2: Filling unit with pilot valve and electrical connector for plug M12x1

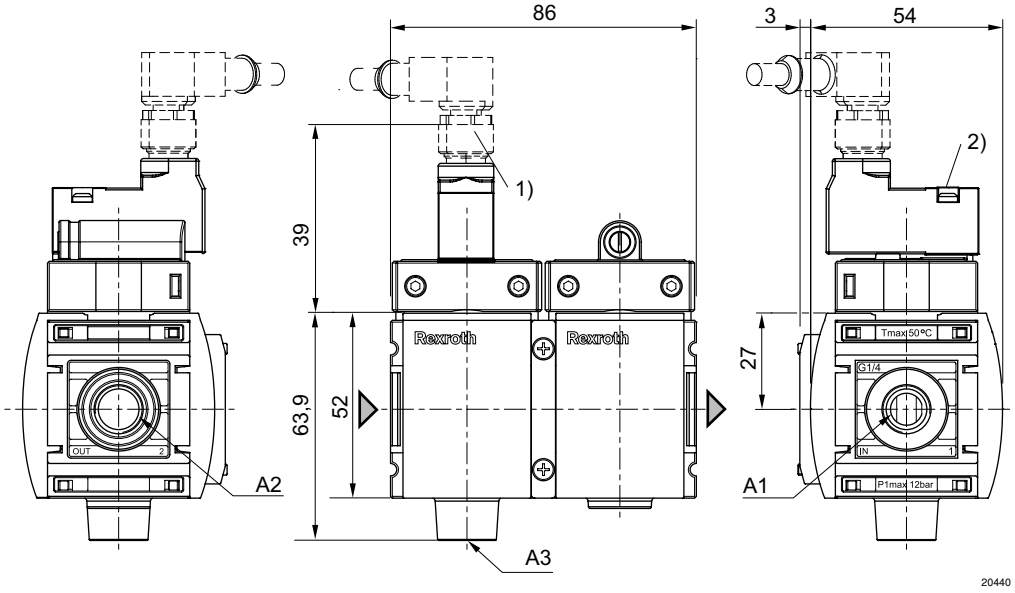

A1 = input
A2 = output
A3 = ventilation port
1) plug M12
2) Manual override

Pin assignment M12x1

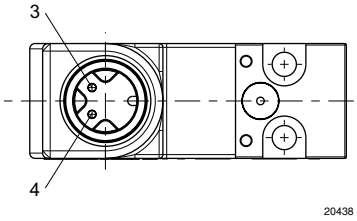

3: +/-
4: +/-