Preparation of compressed air → Maintenance units and components

Standard filter, Series AS1-FLS

► G 1/4 ► Air supply: right ► filter porosity: 5 µm

00137253

Version	Standard filter, Can be assembled into blocks
Mounting orientation	vertical
Working pressure min./max.	1.5 bar / 12 bar
Medium	Compressed air
Medium temperature min./max.	-10°C / +50°C
Ambient temperature min./max.	-10°C / +50°C
Filter reservoir volume	16 cm³
Filter element	exchangeable
filter porosity	5 µm
Condensate drain	See table below
Materials:	
Housing	Polyamide
Front plate	Acrylonitrile butadiene styrene
Seals	Acrylonitrile Butadiene Rubber
Filter insert	Cellpor

Technical Remarks
■ The pressure dew point must be at least 15 °C under ambient and medium temperature and may not exceed 3 °C.
■ solid impurities in the compressed air at the outlet as per ISO 8573-1: class 6

	Port	Qn	Condensate drain	Reservoir	Protective guard	Weight	Part No.
		[l/min]				[kg]	
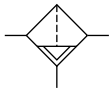	G 1/4	1000	semi-automatic, open without pressure	Polycarbonate	-	0.166	R412014678
			fully automatic, open without pressure	Polycarbonate	-	0.184	R412014679
			fully automatic, closed without pressure	Polycarbonate	-	0.184	R412014680
			semi-automatic, open without pressure	Polycarbonate	metal	0.193	R412014681
			semi-automatic, open without pressure	metal	-	0.243	R412014682
			fully automatic, open without pressure	metal	-	0.255	R412014683
			fully automatic, closed without pressure	metal	-	0.255	R412014684
Nominal flow Qn at p1 = 6.3 bar and Δp = 1 bar							

Standard filter, Series AS1-FLS

► G 1/4 ► Air supply: right ► filter porosity: 5 µm

Flow rate characteristic

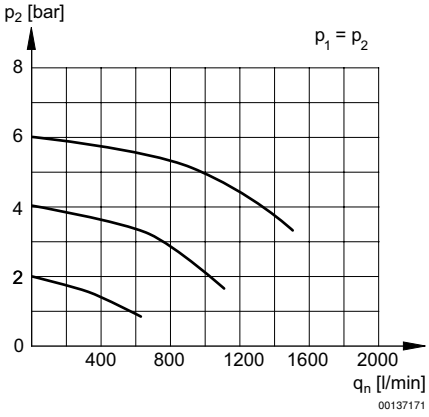

p1 = Working pressure
p2 = Secondary pressure
qn = Nominal flow

Preparation of compressed air → Maintenance units and components

Standard filter, Series AS1-FLS

► G 1/4 ► Air supply: right ► filter porosity: 5 µm

Dimensions

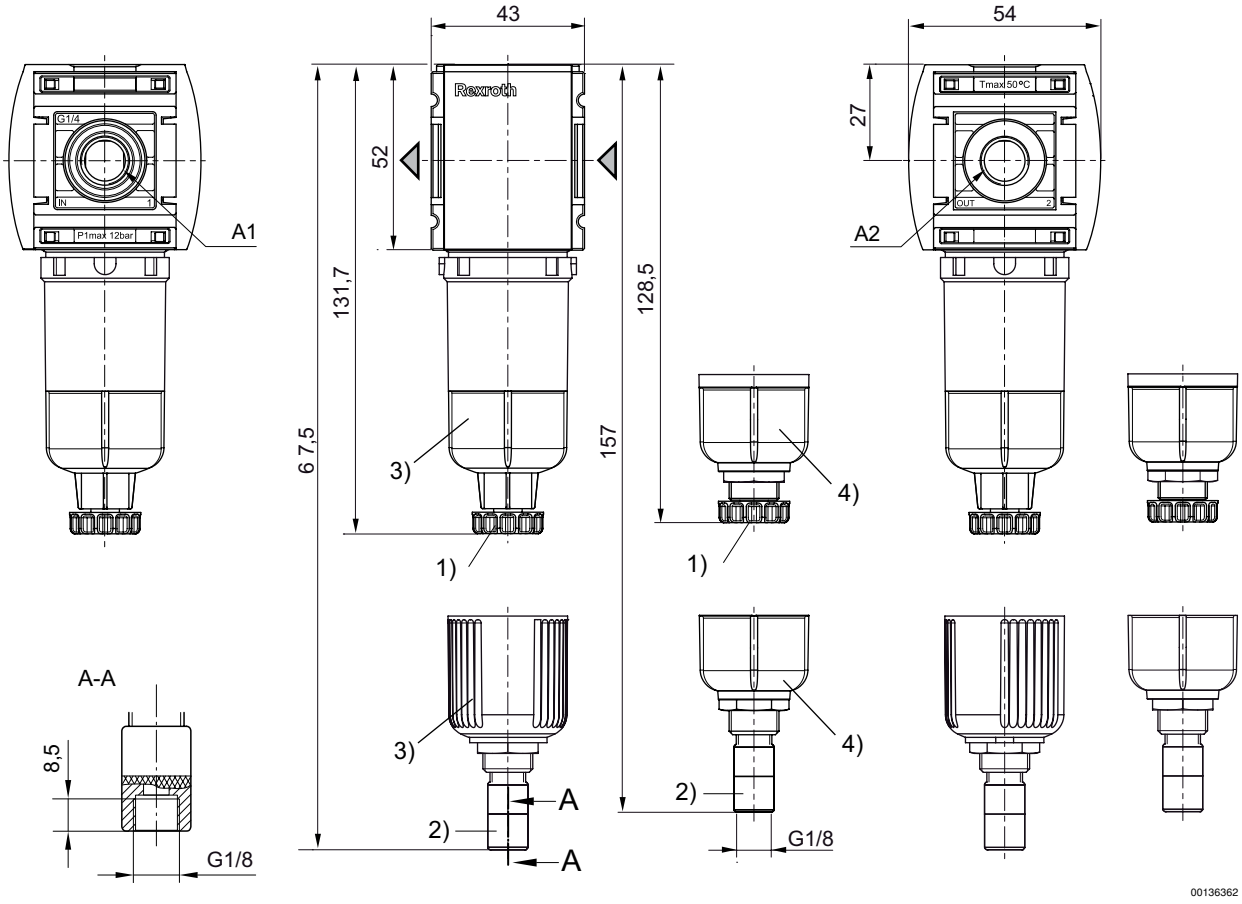

A1 = input
A2 = output
1) Semi-automatic condensate drain
2) Fully automatic condensate drain
3) Reservoir: polycarbonate
4) Reservoir: metal