Preparation of compressed air → Supplementary products

Active carbon filter, Series AS5-FLA

► 3/4 NPTF - 1 NPTF

00121762

Version	Active carbon filter, Can be assembled into blocks
Mounting orientation	vertical
Working pressure min./max.	0 bar / 16 bar
Medium	Compressed air
Medium temperature min./max.	-10°C / +50°C
Ambient temperature min./max.	-10°C / +50°C
Filter reservoir volume	87 cm³
Filter element	exchangeable
Condensate drain	without
Materials:	
Housing	Polyamide
Front plate	Acrylonitrile butadiene styrene
Seals	Acrylonitrile Butadiene Rubber
Threaded bushing	Die cast zinc
Filter insert	Active carbon

Technical Remarks
■ The pressure dew point must be at least 15 °C under ambient and medium temperature and may not exceed 3 °C.
■ These pneumatic components with NPTF or inch thread dimensions are only available from our US sales organization
■ Recommended pre-filtering: 0.01 µm
■ max. residual oil content at the outlet: 0.005 mg/m³

	Port	Qn	Weight	Part No.
		[l/min]	[kg]	
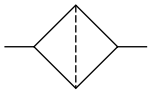	3/4 NPTF	1700	0.71	R432002921
	1 NPTF			R432002922
Nominal flow Qn at 6.3 bar and Δp = 0.1 bar				

Flow rate characteristic

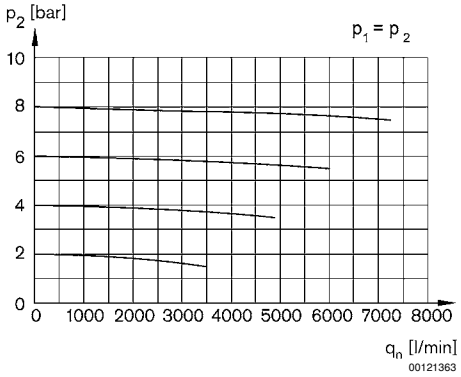

p2 = secondary pressure
qn = nominal flow

Preparation of compressed air → Supplementary products

Active carbon filter, Series AS5-FLA

► 3/4 NPTF - 1 NPTF

Dimensions in inches

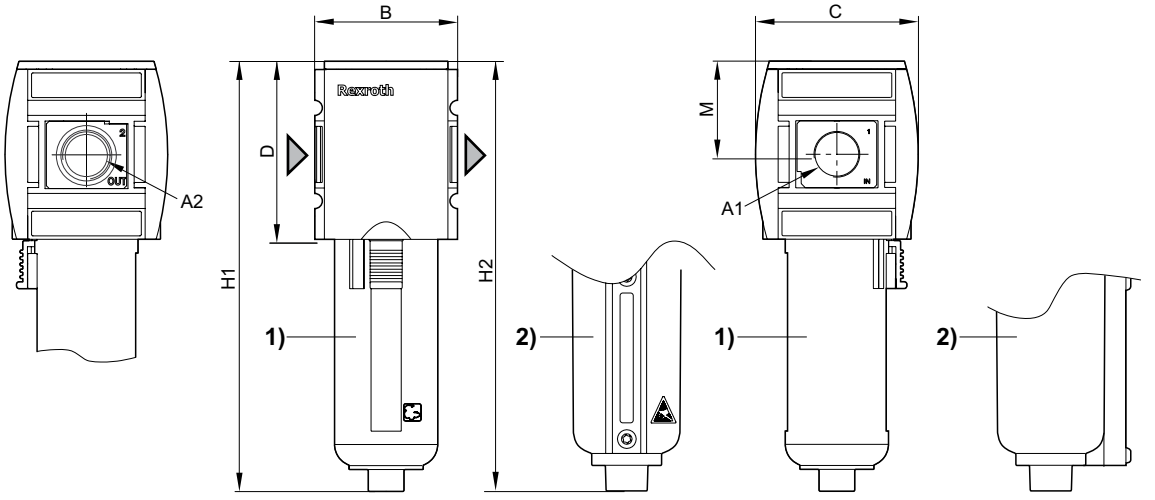

1) Plastic reservoir and protective guard with window
2) Metal reservoir with inspection glass
A1 = input
A2 = output

Dimensions in inches

Part No.	A1	A2	B	C	D	H1	H2	M				
R432002921	3/4 NPTF	3/4 NPT	3.35	4.06	4.29	9.53	9.69	2.28				
R432002922	1 NPTF	1 NPT	3.35	4.06	4.29	9.53	9.69	2.28				