Piston rod cylinder → Supplementary products

Compact cylinder, Series KPZ-tandem cylinder

► Ø 25 - 80 mm ► 2x ► Ports: M5 - G 1/8 ► double-acting ► with magnetic piston ► cushioning: elastic ► Piston rod: Reinforced, internal thread

00103633

a83

Compressed air connection	internal thread
Working pressure min./max.	1 bar / 10 bar
Ambient temperature min./max.	-20°C / +80°C
Medium temperature min./max.	-20°C / +80°C
Medium	Compressed air
Max. particle size	5 µm
Oil content of compressed air	0 mg/m³ - 5 mg/m³
Pressure for determining piston forces	6 bar

Materials:	
Cylinder tube	Aluminum, anodized
Piston rod	Stainless steel
Front cover	Aluminum
End cover	Aluminum
Seal	Polyurethane
Scraper	Polyurethane

Technical Remarks

- The pressure dew point must be at least 15 °C under ambient and medium temperature and may not exceed 3 °C.
- The oil content of air pressure must remain constant during the life cycle.
- Use only the approved oils from Bosch Rexroth, see chapter „Technical information“.
- Use our Internet configurator to order this variant with an external thread.

Piston Ø		**[mm]**	**25**	**40**	**63**	**80**	
Retracting piston force		[N]	220	560	1480	2390	
Extracting piston force		[N]	480	1220	3130	5050	
Impact energy		[J]	0.2	0.52	0.75	0.75	
Weight	0 mm stroke	[kg]	0.346	0.875	1.9	3.661	
	+10 mm stroke	[kg]	0.05	0.102	0.184	0.27	
Stroke max.		[mm]	200	200	200	200	

	Piston Ø **Piston rod thread** **Ports**	**25** **M6** **M5**	**40** **M10** **M5**	**63** **M12** **G 1/8**	**80** **M16** **G 1/8**	
	Stroke 5	0822592200	0822594200	0822596200	0822597200	

Configurable product	
	This product is configurable. Please use our Internet configurator at www.boschrexroth.com/pneumatics or contact the nearest Bosch Rexroth sales office.

Piston rod cylinder → Supplementary products

Compact cylinder, Series KPZ-tandem cylinder

► Ø 25 - 80 mm ► 2x ► Ports: M5 - G 1/8 ► double-acting ► with magnetic piston ► cushioning: elastic ► Piston rod: Reinforced, internal thread

Dimensions

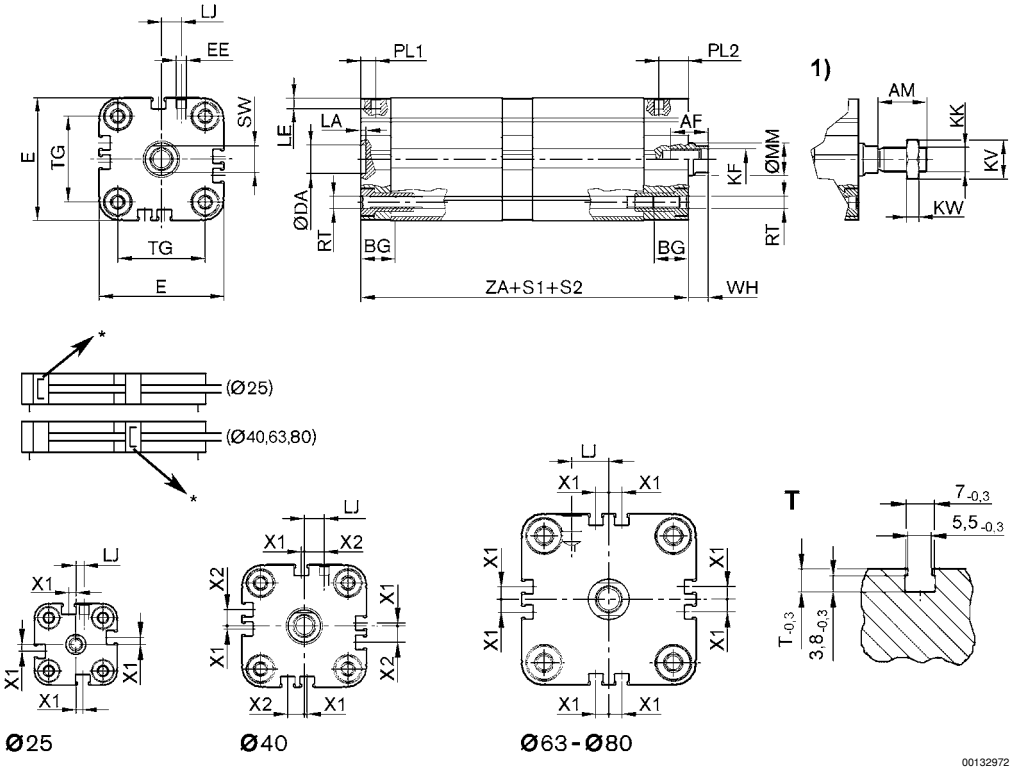

S = stroke
T = View for sensor groove
1) external thread
Use our Internet configurator to order this variant with an external thread.
* Position of the Magnet

Piston Ø	AF	AM	BG	DA H11	E	EE	KF H6	KK	KV	KW	LA	LJ	MM f8
25	10	22	16	12	40	M5	M6	M10x1,25	17	6	2.5	4	10
40	16	24	20	14	60	M5	M10	M12x1,25	19	7	2.5	9.5	16
63	20	32	20	18	84	G 1/8	M12	M16x1,5	24	8	2.5	17.8	20
80	24	40	22	23	103	G 1/8	M16	M20x1,5	30	10	3	20	25

Piston Ø	PL 1	PL 2	RT 6H	SW h13	T	TG	X1	X2	WH	ZA 2			
25	7.5	7.5	M5	8	5.3	26 ±0,4	3.4	–	7.5	78			
40	12.5	14.5	M6	13	5.4	42 ±0,5	1.4	8	9.5	102.5			
63	11.5	19	M8	16	5.7	62 ±0,7	6.15	–	10	116			
80	13.8	19.8	M10	21	6.1	82 ±0,7	7.7	–	12	134.5			