Rodless cylinders → Rodless cylinders

Rodless cylinders, Series RTC-SB

► Ø 16 - 32 mm ► double-acting ► with magnetic piston ► Slide bearing guide ► cushioning: pneumatically, adjustable

P277_002

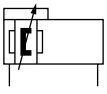

a24

Working pressure min./max.	2 bar / 8 bar
Ambient temperature min./max.	-10°C / +60°C
Medium temperature min./max.	-10°C / +60°C
Medium	Compressed air
Max. particle size	5 µm
Oil content of compressed air	0 mg/m³ - 5 mg/m³
Pressure for determining piston forces	6,3 bar

Materials:	
Cylinder tube	Aluminum, anodized
Covers	Aluminum, anodized
Seals	Polyurethane
Sealing strips	Stainless steel; Polyurethane
Guide shuttle	Aluminum, anodized
Slide bearing guide	Polyethylene

Piston Ø		**[mm]**	**16**	**25**	**32**		
Piston force		[N]	127	309	507		
Cushioning length		[mm]	20	20	20		
Speed max.		[m/s]	5.5	6.5	4		
Weight	0 mm stroke	[kg]	0.76	1.38	2.15		
	+10 mm stroke	[kg]	0.023	0.038	0.047		
Stroke max.		[mm]	6669	6641	6616		

Configurable product	
	This product is configurable. Please use our Internet configurator at www.boschrexroth.com/pneumatics or contact the nearest Bosch Rexroth sales office.

Cushioning diagram, Horizontally mounted

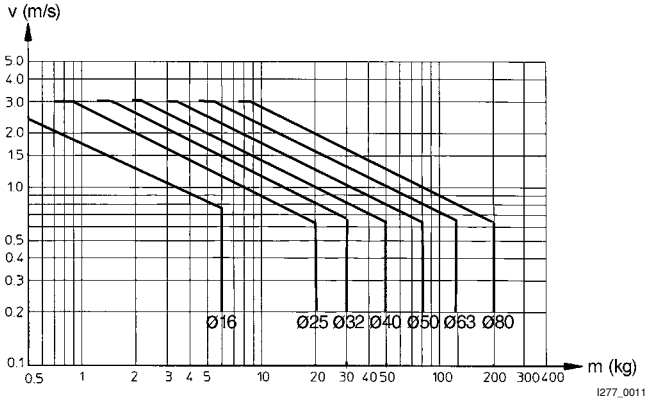

Vertically mounted

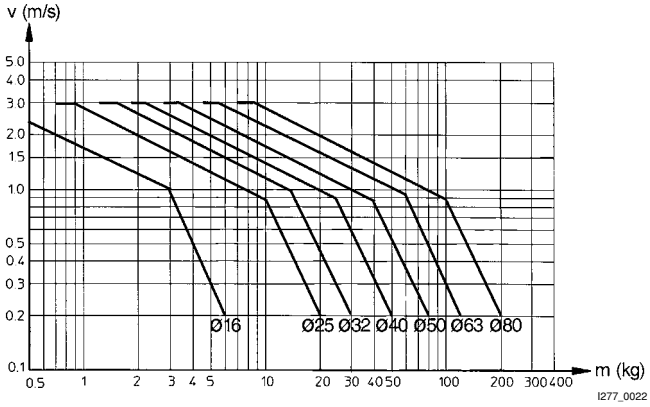

v = Piston velocity [m/s]
m = Cushionable mass [kg]

Rodless cylinders, Series RTC-SB

► Ø 16 - 32 mm ► double-acting ► with magnetic piston ► Slide bearing guide ► cushioning: pneumatically, adjustable

Permissible static forces F1, F2, F3 and torques M, Mv, Ms

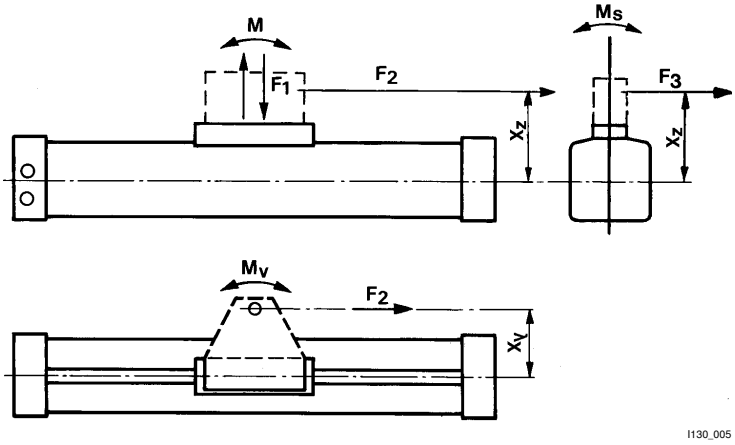

Ø	F1 [N]	F2 [N]	F3 [N]	M [Nm]	Mv [Nm]	Ms [Nm]								
16	1600	800	350	25	25	10								
25	2300	1800	700	50	50	25								
32	2600	2200	1000	80	80	50								

Torque dimensioning M [Nm]

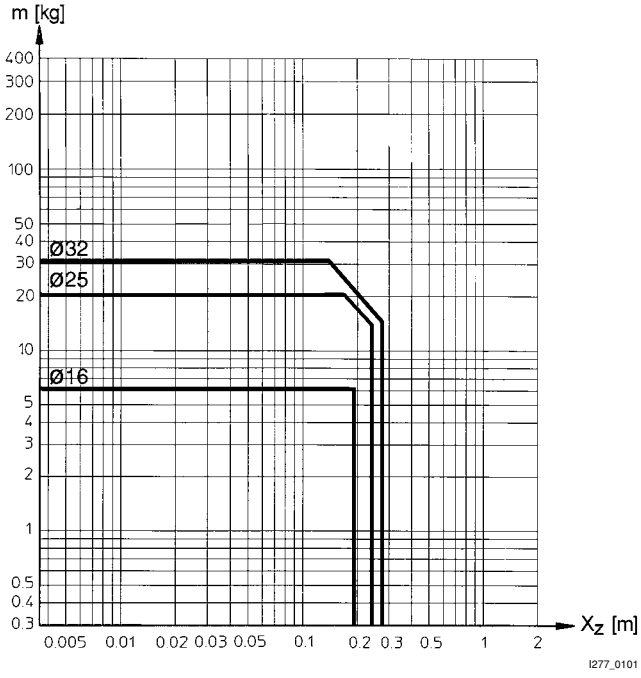

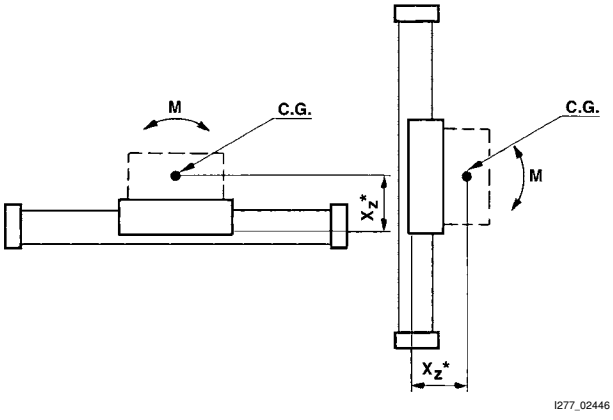

* The measure EH must be included in Xz, see the dimensional drawings.

Rodless cylinders, Series RTC-SB

► Ø 16 - 32 mm ► double-acting ► with magnetic piston ► Slide bearing guide ► cushioning: pneumatically, adjustable

Torque dimensioning Ms [Nm]

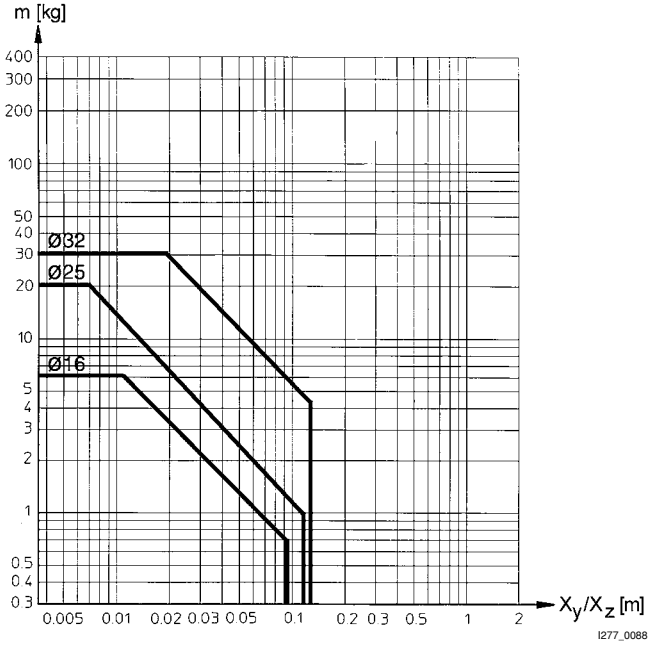

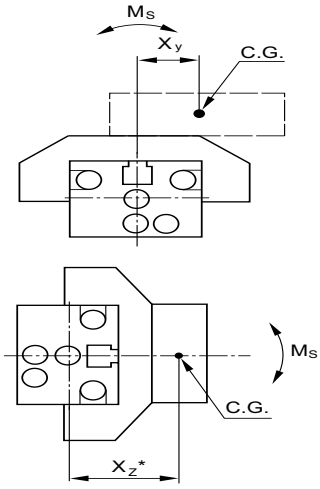

* The measure EH must be included in Xz, see the dimensional drawings.

Torque dimensioning Mv [Nm]

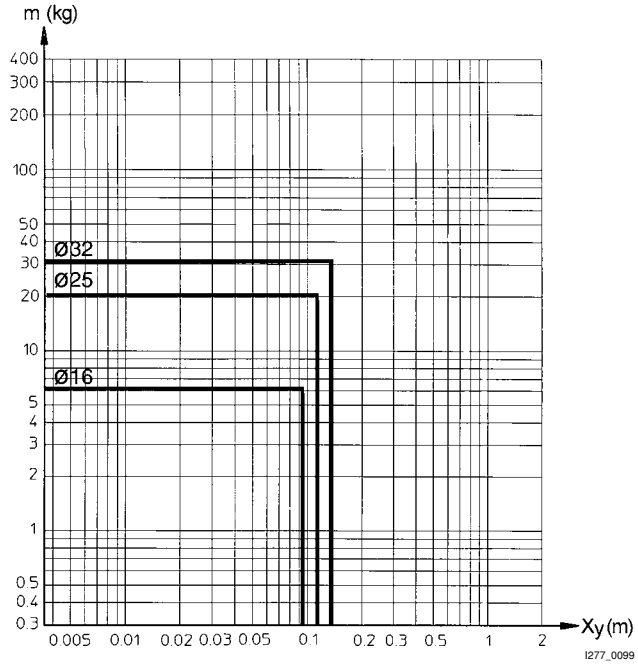

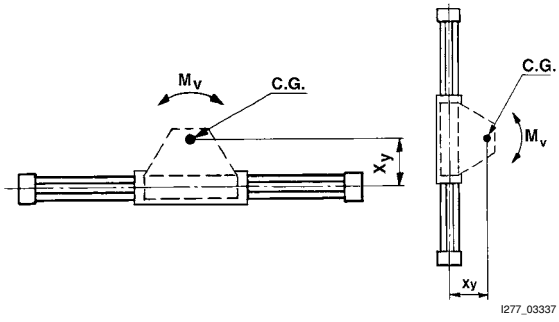

Rodless cylinders, Series RTC-SB

► Ø 16 - 32 mm ► double-acting ► with magnetic piston ► Slide bearing guide ► cushioning: pneumatically, adjustable

Dimensions

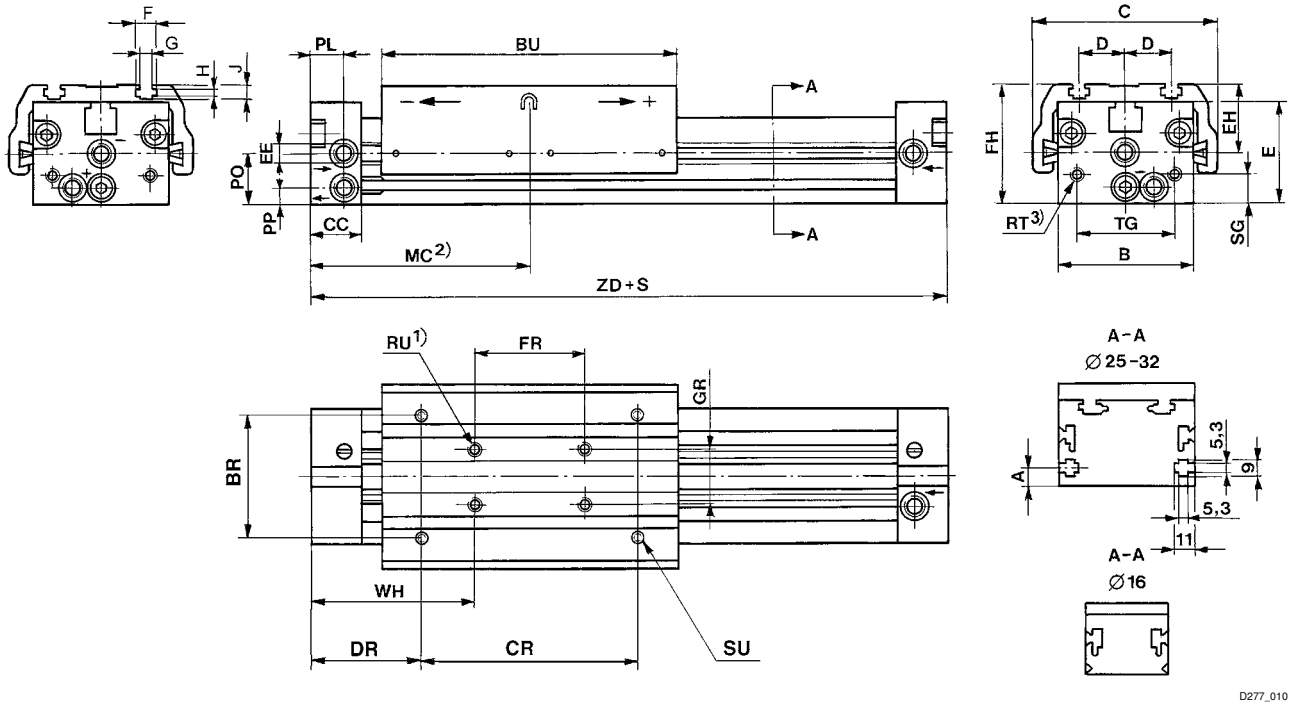

S = stroke

Ø	A	B	C	D	E	F	G	H	J	BR	BU	CC	CR	DR
16	–	45	68	20	40,5	7,7	4,5	2,9	5,9	26,6	118	28	60	63,5
25	8,8	59	82	20	50,8	7,7	4,5	2,9	5,9	54,4	147	28	80	67,5
32	10	75	102	25	56	11	6,6	4	7,5	68	163	28	100	70

Ø	EE	FH	EH	FR	GR	MC 2)	PL	PO	PP	RT 3)	RU 1)	SG	SU	TG
16	M7	44,3	25,5	40	18	93,5	17,5	18,8	6,8	M5	M4	13	M5	35,5
25	G 1/8	54,8	29,0	60	18	107,5	18,5	25,8	8,8	M6	M4	16	M6	46
32	G 1/8	65,1	38,0	60	30	120	18,5	27	8,5	M6	M6	15,2	M6	54

Ø	WH	ZD
16	73,5	187
25	77,5	215
32	90	240

1) thread depth: 6 mm for piston Ø 16–25 mm, 10 mm for piston Ø 32 mm
2) position of the magnet in the shuttle
3) thread depth: 8 mm