Piston rod cylinder → Standard cylinders

ISO 15552, Series TRB

► Ø 32 - 125 mm ► Ports: G 1/8 - G 1/2 ► double-acting ► heat resistant ► cushioning: pneumatically, adjustable ► Piston rod: external thread ► silicone-free

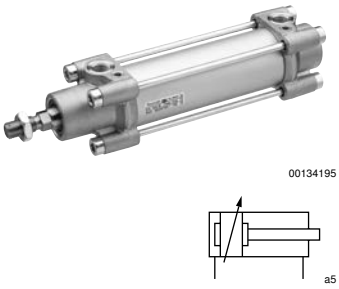

Standards	ISO 15552
Compressed air connection	internal thread
Working pressure min./max.	1.5 bar / 10 bar
Ambient temperature min./max.	-10°C / +150°C
Medium temperature min./max.	-10°C / +150°C
Medium	Compressed air
Max. particle size	50 µm
Oil content of compressed air	0 mg/m³ - 5 mg/m³
Pressure for determining piston forces	6,3 bar

Materials:	
Cylinder tube	Aluminum, anodized
Piston rod	Stainless steel
Front cover	Die-cast aluminum
End cover	Die-cast aluminum
Seal	Fluorocaoutchouc
Nut for piston rod	Steel, galvanized
Scraper	Fluorocaoutchouc

Technical Remarks
■ The pressure dew point must be at least 15 °C under ambient and medium temperature and may not exceed 3 °C.
■ The oil content of compressed air must remain constant during the life cycle.
■ Use only the approved oils from Bosch Rexroth, see chapter „Technical information“.

Piston Ø		[mm]	32	40	50	63	80
Retracting piston force		[N]	435	660	1035	1765	2855
Extracting piston force		[N]	505	790	1235	1960	3165
Cushioning length		[mm]	11.5	15	17	16.5	19.5
Cushioning energy		[J]	4.8	9	15	27	54
Weight	0 mm stroke	[kg]	0.46	0.67	1.14	1.4	2.12
	+10 mm stroke	[kg]	0.024	0.03	0.036	0.052	0.06
Stroke max.		[mm]	1600	1900	2100	2500	2800
Tie-rods			Stainless steel	Stainless steel	Steel galvanized	Steel galvanized	Steel galvanized

Piston Ø		[mm]	100	125			
Retracting piston force		[N]	4635	7220			
Extracting piston force		[N]	4945	7725			
Cushioning length		[mm]	19.5	22			
Cushioning energy		[J]	88	140			
Weight	0 mm stroke	[kg]	3.16	6.92			
	+10 mm stroke	[kg]	0.065	0.21			
Stroke max.		[mm]	2800	2750			
Tie-rods			Steel galvanized	Steel galvanized			

Piston rod cylinder → Standard cylinders

ISO 15552, Series TRB

► Ø 32 - 125 mm ► Ports: G 1/8 - G 1/2 ► double-acting ► heat resistant ► cushioning: pneumatically, adjustable ► Piston rod: external thread ► silicone-free

	Piston Ø **Piston rod thread** **Ports** **Piston rod Ø**	**32** **M10x1,25** **G 1/8** **12**	**40** **M12x1,25** **G 1/4** **16**	**50** **M16x1,5** **G 1/4** **20**	**63** **M16x1,5** **G 3/8** **20**	**80** **M20x1,5** **G 3/8** **25**
	Stroke 25	0822240400	**0822241400**	0822242400	0822243400	0822244400
	50	**0822240401**	**0822241401**	**0822242401**	**0822243401**	**0822244401**
	80	0822240402	**0822241402**	**0822242402**	0822243402	**0822244402**
	100	**0822240403**	**0822241403**	**0822242403**	**0822243403**	0822244403
	125	0822240404	**0822241404**	0822242404	**0822243404**	0822244404
	160	0822240405	0822241405	**0822242405**	0822243405	**0822244405**
	200	0822240406	0822241406	0822242406	**0822243406**	**0822244406**
	250	0822240407	0822241407	0822242407	0822243407	0822244407
	320	0822240408	0822241408	0822242408	0822243408	**0822244408**
	400	0822240409	0822241409	0822242409	0822243409	**0822244409**
	500	0822240410	0822241410	0822242410	**0822243410**	0822244410
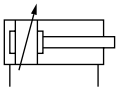	**Piston Ø** **Piston rod thread** **Ports** **Piston rod Ø**	**100** **M20x1,5** **G 1/2** **25**	**125** **M27x2** **G 1/2** **32**			
	Stroke 25	0822245400	0822206401			
	50	0822245401	0822206402			
	80	0822245402	0822206403			
	100	**0822245403**	0822206404			
	125	0822245404	0822206405			
	160	**0822245405**	0822206406			
	200	0822245406	0822206407			
	250	0822245407	**0822206408**			
	320	0822245408	0822206409			
	400	0822245409	**0822206410**			
	500	0822245410	**0822206411**			

Configurable product	
	This product is configurable. Please use our Internet configurator at www.boschrexroth.com/pneumatics or contact the nearest Bosch Rexroth sales office.

Piston rod cylinder → Standard cylinders

ISO 15552, Series TRB

► Ø 32 - 125 mm ► Ports: G 1/8 - G 1/2 ► double-acting ► heat resistant ► cushioning: pneumatically, adjustable ► Piston rod: external thread ► silicone-free

Cushioning diagram

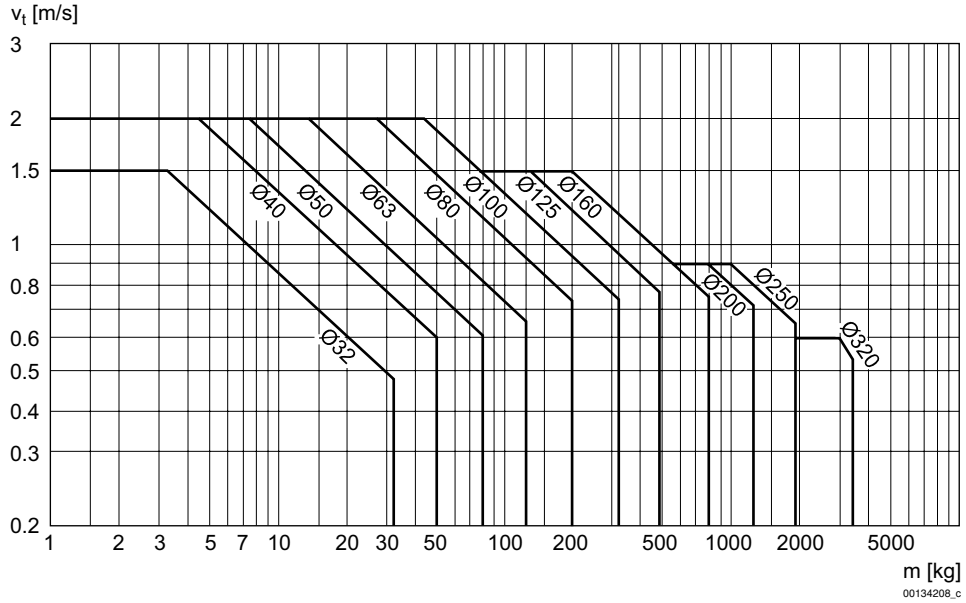

v = Piston velocity [m/s]
m = Cushionable mass [kg]

Dimensions

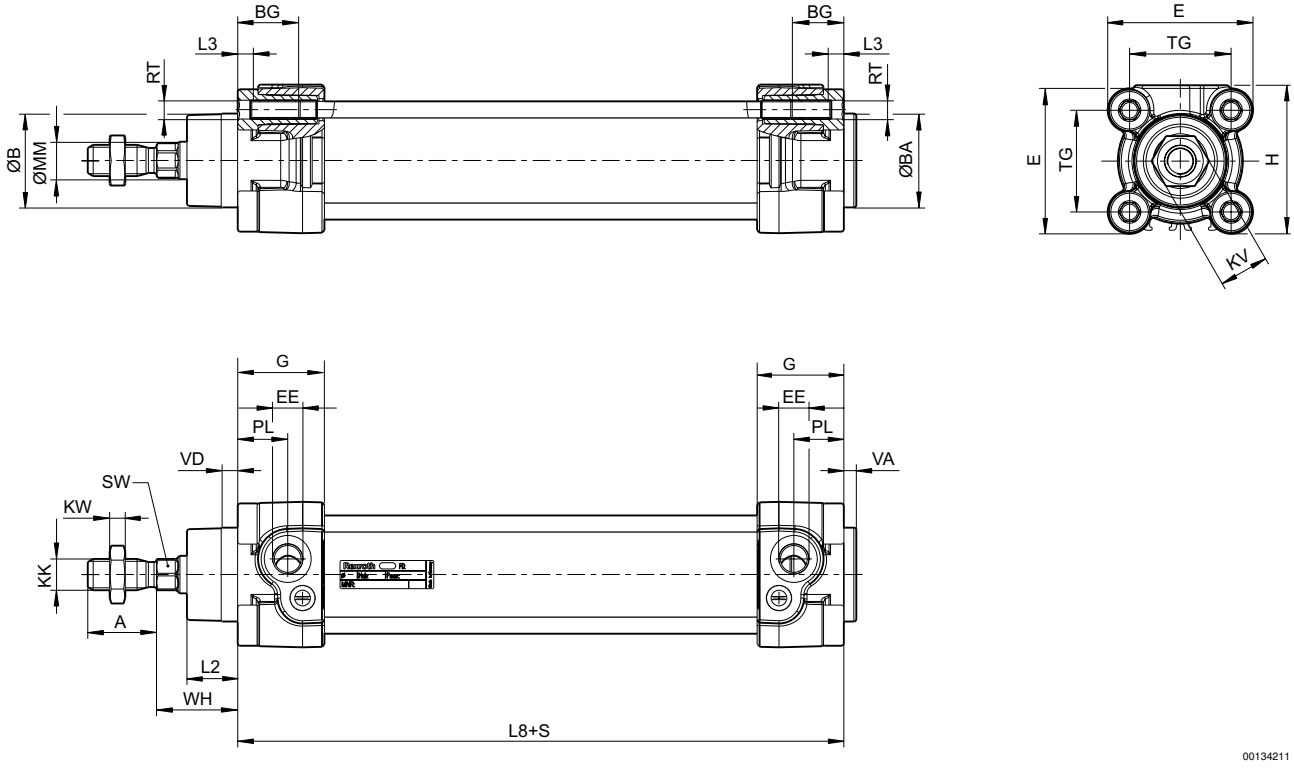

S = stroke

Piston rod cylinder → Standard cylinders

ISO 15552, Series TRB

► Ø 32 - 125 mm ► Ports: G 1/8 - G 1/2 ► double-acting ► heat resistant ► cushioning: pneumatically, adjustable ► Piston rod: external thread ► silicone-free

Piston Ø	A -2	AF+1	ØB d11	ØBA d11	BG min.	E	EE	G	H	KF	KK
32	22	12	30	30	16	46.5	G1/8	27.75	47.5	M6	M10x1,25
40	24	13.5	35	35	16	53	G1/4	33.25	53	M8	M12x1,25
50	32	17	40	40	16	65	G1/4	31	65	M10	M16x1,5
63	32	17	45	45	16	75	G3/8	38.25	75	M10	M16x1,5
80	40	21	45	45	17	95	G3/8	38.25	95	M12	M20x1,5
100	40	21	55	55	17	115	G1/2	42.25	115	M12	M20x1,5
125	54	28	60	60	20	140	G1/2	53.85	140	M16	M27x2

Piston Ø	KV	KW	ØMM f8	PL	L2	L3 ±0,5	L8	RT	SW	TG	VA -1
32	16	5	12	16	16.25	4.5	94±0,4	M6	10	32,5±0,5	4
40	18	6	16	20	18.25	4.5	105±0,7	M6	13	38±0,5	4
50	24	8	20	19	25	4.5	106±0,7	M8	17	46,5±0,6	4
63	24	8	20	24	25	4.5	121±0,8	M8	17	56,5±0,7	4
80	30	10	25	23.5	33	0	128±0,8	M10	22	72±0,7	4
100	30	10	25	25	36	0	138±1	M10	22	89±0,7	4
125	41	13.5	32	33	45	0	160±1	M12	27	110±1,1	6

Piston Ø	VD	WH											
32	5	26±1,4											
40	5	30±1,4											
50	5	37±1,4											
63	5	37±1,8											
80	5	46±1,8											
100	5	51±1,8											
125	7	65±2,2											