Piston rod cylinder → Standard cylinders

ISO 15552, Series TRB

► Ø 32 - 125 mm ► Ports: G 1/8 - G 1/2 ► double-acting ► with magnetic piston ► cushioning: elastic, adjustable, pneumatically ► Piston rod: external thread ► ATEX optional

00134195

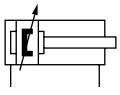

a15

Standards	ISO 15552
Compressed air connection	internal thread
Working pressure min./max.	1.5 bar / 10 bar
Ambient temperature min./max.	-20°C / +80°C
Medium temperature min./max.	-20°C / +80°C
Medium	Compressed air
Max. particle size	50 µm
Oil content of compressed air	0 mg/m³ - 5 mg/m³
Pressure for determining piston forces	6,3 bar

Materials:	
Cylinder tube	Aluminum, anodized
Piston rod	Stainless steel
Front cover	Die-cast aluminum
End cover	Die-cast aluminum
Seal	Polyurethane
Nut for piston rod	Steel, galvanized
Scraper	Polyurethane

Technical Remarks

- The pressure dew point must be at least 15 °C under ambient and medium temperature and may not exceed 3 °C.
- The oil content of compressed air must remain constant during the life cycle.
- Use only the approved oils from Bosch Rexroth, see chapter „Technical information“.
- ATEX-certified cylinders can be generated in the Internet configurator.
- ATEX ID: II 2G c IIB T4 II 2D c IP65 T125°C X
- The operating temperature range for ATEX-certified cylinders is -20°C to +50°C.

Piston Ø		**[mm]**	**32**	**40**	**50**	**63**	**80**
Retracting piston force		[N]	435	660	1035	1765	2855
Extracting piston force		[N]	505	790	1235	1960	3165
Cushioning length		[mm]	16.5	15	17	16.5	19.5
Cushioning energy		[J]	4.8	9	15	27	54
Weight	0 mm stroke	[kg]	0.46	0.67	1.14	1.4	2.12
	+10 mm stroke	[kg]	0.024	0.03	0.036	0.052	0.06
Stroke max.		[mm]	1600	1900	2100	2500	2800
Tie-rods			Stainless steel	Stainless steel	Steel galvanized	Steel galvanized	Steel galvanized

Piston Ø		**[mm]**	**100**	**125**			
Retracting piston force		[N]	4635	7220			
Extracting piston force		[N]	4945	7725			
Cushioning length		[mm]	19.5	22			
Cushioning energy		[J]	88	140			
Weight	0 mm stroke	[kg]	3.16	6.92			
	+10 mm stroke	[kg]	0.065	0.21			
Stroke max.		[mm]	2800	2750			
Tie-rods			Steel galvanized	Steel galvanized			

Piston rod cylinder → Standard cylinders

ISO 15552, Series TRB

► Ø 32 - 125 mm ► Ports: G 1/8 - G 1/2 ► double-acting ► with magnetic piston ► cushioning: elastic, adjustable, pneumatically ► Piston rod: external thread ► ATEX optional

	Piston Ø Piston rod thread Ports Piston rod Ø	32 M10x1,25 G 1/8 12	40 M12x1,25 G 1/4 16	50 M16x1,5 G 1/4 20	63 M16x1,5 G 3/8 20	80 M20x1,5 G 3/8 25
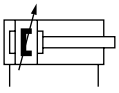	Stroke 25	**0822340001**	**0822341001**	**0822342001**	**0822343001**	**0822344001**
	50	**0822340002**	**0822341002**	**0822342002**	**0822343002**	**0822344002**
	80	**0822340003**	**0822341003**	**0822342003**	**0822343003**	**0822344003**
	100	**0822340004**	**0822341004**	**0822342004**	**0822343004**	**0822344004**
	125	**0822340005**	**0822341005**	**0822342005**	**0822343005**	**0822344005**
	160	**0822340006**	**0822341006**	**0822342006**	**0822343006**	**0822344006**
	200	**0822340007**	**0822341007**	**0822342007**	**0822343007**	**0822344007**
	250	**0822340008**	**0822341008**	**0822342008**	**0822343008**	**0822344008**
	320	**0822340009**	**0822341009**	**0822342009**	**0822343009**	**0822344009**
	400	**0822340010**	**0822341010**	**0822342010**	**0822343010**	**0822344010**
	500	**0822340011**	**0822341011**	**0822342011**	**0822343011**	**0822344011**
	Piston Ø Piston rod thread Ports Piston rod Ø	**100 M20x1,5 G 1/2 25**	**125 M27x2 G 1/2 32**			
	Stroke 25	**0822345001**	**0822306201**			
	50	**0822345002**	**0822306202**			
	80	**0822345003**	**0822306203**			
	100	**0822345004**	**0822306204**			
	125	**0822345005**	**0822306205**			
	160	**0822345006**	**0822306206**			
	200	**0822345007**	**0822306207**			
	250	**0822345008**	**0822306208**			
	320	**0822345009**	**0822306209**			
	400	**0822345010**	**0822306210**			
	500	**0822345011**	**0822306211**			

Configurable product	
	This product is configurable. Please use our Internet configurator at www.boschrexroth.com/pneumatics or contact the nearest Bosch Rexroth sales office.

Piston rod cylinder → Standard cylinders

ISO 15552, Series TRB

► Ø 32 - 125 mm ► Ports: G 1/8 - G 1/2 ► double-acting ► with magnetic piston ► cushioning: elastic, adjustable, pneumatically ► Piston rod: external thread ► ATEX optional

Cushioning diagram

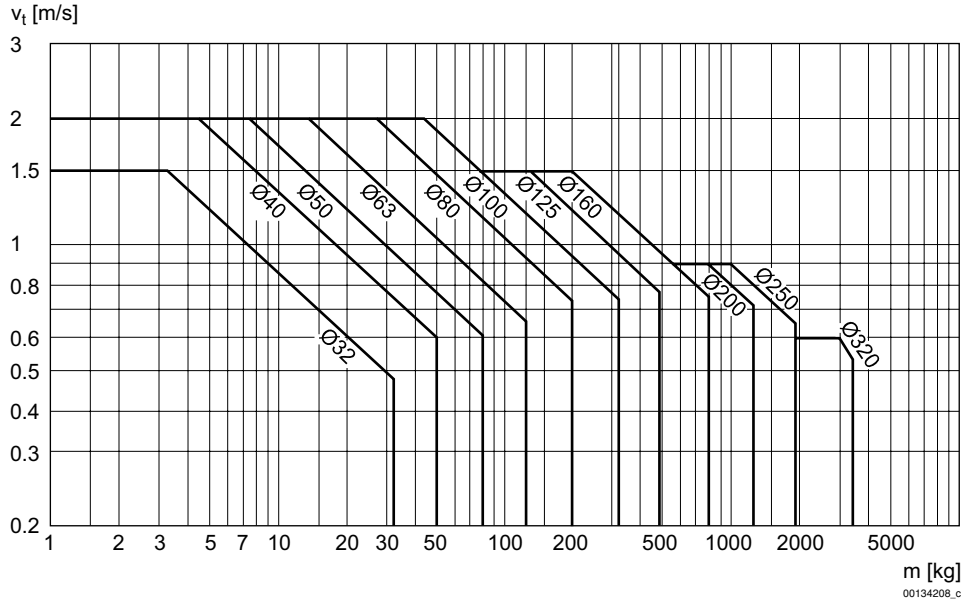

v = Piston velocity [m/s]
m = Cushionable mass [kg]

Dimensions

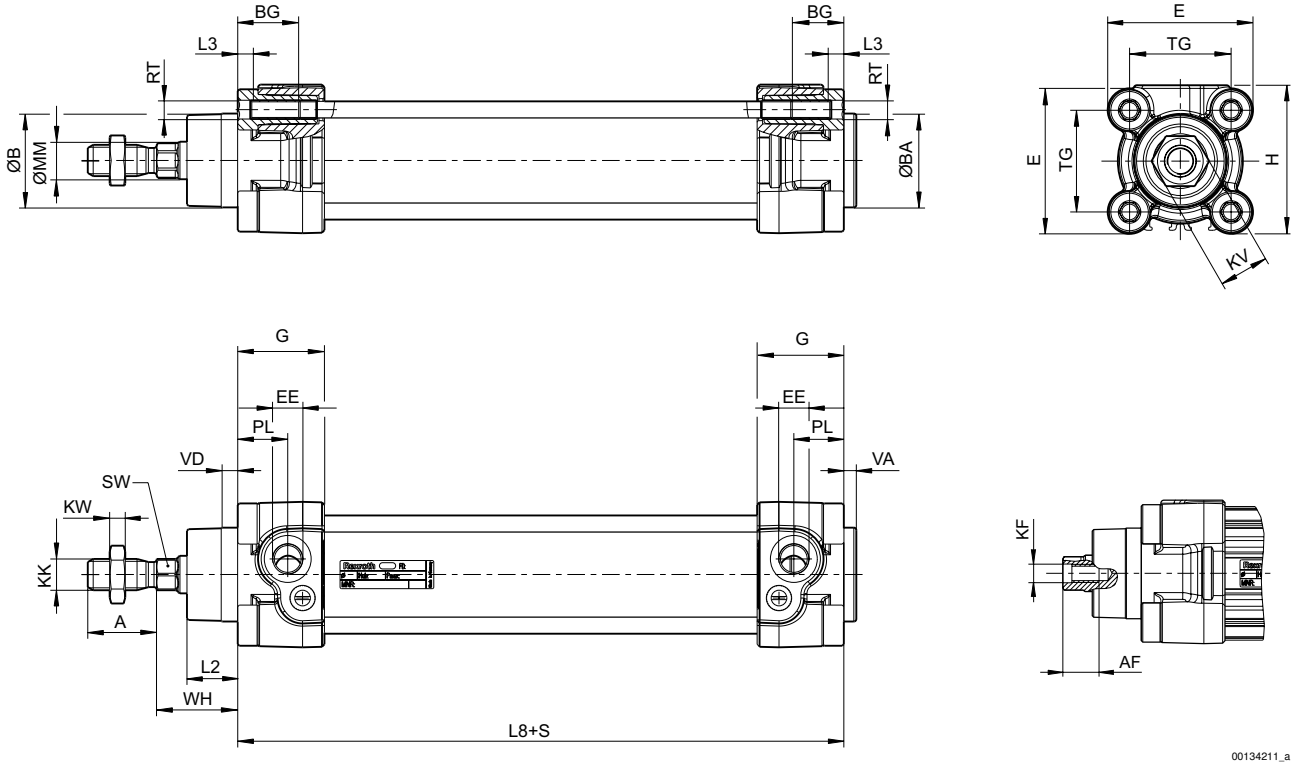

S = stroke

Piston rod cylinder → Standard cylinders

ISO 15552, Series TRB

► Ø 32 - 125 mm ► Ports: G 1/8 - G 1/2 ► double-acting ► with magnetic piston ► cushioning: elastic, adjustable, pneumatically ► Piston rod: external thread ► ATEX optional

Piston Ø	A -2	AF+1	ØB d11	ØBA d11	BG min.	E	EE	G	H	KF	KK
32	22	12	30	30	16	46.5	G1/8	27.75	47.5	M6	M10x1,25
40	24	13.5	35	35	16	53	G1/4	33.25	53	M8	M12x1,25
50	32	17	40	40	16	65	G1/4	31	65	M10	M16x1,5
63	32	17	45	45	16	75	G3/8	38.25	75	M10	M16x1,5
80	40	21	45	45	17	95	G3/8	38.25	95	M12	M20x1,5
100	40	21	55	55	17	115	G1/2	42.25	115	M12	M20x1,5
125	54	28	60	60	20	140	G1/2	53.85	140	M16	M27x2

Piston Ø	KV	KW	ØMM f8	PL	L2	L3 ±0,5	L8	RT	SW	TG	VA -1
32	16	5	12	16	16.25	4.5	94±0,4	M6	10	32,5±0,5	4
40	18	6	16	20	18.25	4.5	105±0,7	M6	13	38±0,5	4
50	24	8	20	19	25	4.5	106±0,7	M8	17	46,5±0,6	4
63	24	8	20	24	25	4.5	121±0,8	M8	17	56,5±0,7	4
80	30	10	25	23.5	33	0	128±0,8	M10	22	72±0,7	4
100	30	10	25	25	36	0	138±1	M10	22	89±0,7	4
125	41	13.5	32	33	45	0	160±1	M12	27	110±1,1	6

Piston Ø	VD	WH											
32	5	26±1,4											
40	5	30±1,4											
50	5	37±1,4											
63	5	37±1,8											
80	5	46±1,8											
100	5	51±1,8											
125	7	65±2,2											