Valve systems → Valve systems

2x3/2-way valve, Series HF02-LG

► Qn = 1400 l/min ► plate connection ► Manual override: with detent

00006435

Certificates	UR (Underwriters Laboratories)
Version	Spool valve, zero overlap
Pilot	external, internal
Sealing principle	soft sealing
Blocking principle	Single base plate principle
Working pressure min./max.	-0.9 bar / 10 bar
Control pressure min./max.	-- / 10 bar
Ambient temperature min./max.	+0°C / +50°C
Medium temperature min./max.	+0°C / +50°C
Medium	Compressed air
Max. particle size	5 µm
Oil content of compressed air	0 mg/m³ - 5 mg/m³
Degree of protectionwith electrical connector/plug	IP 65
Protective circuit	Z-diode Protected against polarity reversal
Status display LED	Yellow
Duty cycle	100 %
Switch-on time	20 ms
Switch-off time	33 ms
Generic emission standard in accordance with	EN 50081-1
Generic immunity standard in accordance with	EN 50082-2
Mounting screw	cross recessed DIN EN ISO 4757-Z2
mounting screw tightening torque	1.3 Nm
Weight	0.144 kg
Materials:	
Housing	Polyamide
Seals	Acrylonitrile Butadiene Rubber; Hydrogenated acrylonitrile butadiene rubber

Technical Remarks

- The pressure dew point must be at least 15 °C under ambient and medium temperature and may not exceed 3 °C.
- The oil content of compressed air must remain constant during the life cycle.
- Use only the approved oils from Bosch Rexroth, see chapter „Technical information“.
- The pilot type (external/internal) is not implemented in the valve, but in the end plate of the valve system.
- The UL certification refers to the pilot valve.

Operating voltage	Voltage tolerance	Power consumption
DC	DC	DC
		W
24 V	-15% / +20%	0.35

Valve systems → Valve systems

2x3/2-way valve, Series HF02-LG

► Qn = 1400 l/min ► plate connection ► Manual override: with detent

		MO	Operating voltage	Flow conductance		Flow rate value	Part No.
			DC	b	C	Qn	
					[l/(s*bar)]	[l/min]	
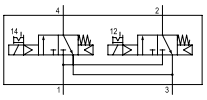	NC/NC		24 V	0.4	5.87	1400	**0820056101**
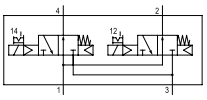	NO/NO		24 V	0.4	5.87	1400	**0820056201**
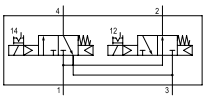	NC/NO		24 V	0.4	5.87	1400	**0820056301**

MO = Manual override
With collective pilot air exhaust
Nominal flow Qn at 6 bar and Δp = 1 bar

Dimensions

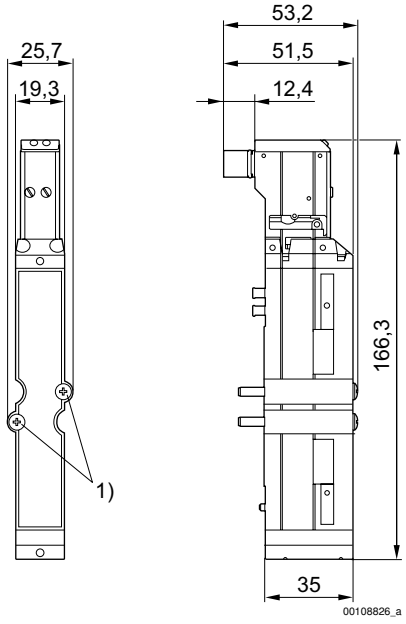

1) Mounting screw: X-slot DIN EN ISO 4757-Z2
tightening torque for mounting screw [Nm]: 1.3