Pressure regulators → Supplementary products

Fine setting valve

► Qn = 900 l/min ► Actuating element: Pedal ► internal thread, internal thread ► Poppet valve

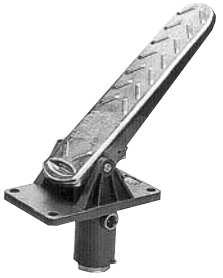

3610-731

Working pressure min./max.	0.1 bar / 10 bar
Ambient temperature min./max.	-25°C / +70°C
Medium temperature min./max.	-25°C / +70°C
Medium	Compressed air
Qn	900 l/min
Hysteresis	< 0,15 bar
Materials:	
Housing	Die cast zinc
Seals	Acrylonitrile Butadiene Rubber

	Compressed air connection		Adjustment range min./max.	actuating force, min.	Weight	Part No.
	Input	Output				
			[bar]	[N]	[kg]	
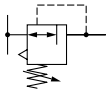	G 1/4	G 1/4	0.1 / 2.6	67	1.5	3610647100
			0.1 / 4.6	77		**3610647400**
			0.1 / 5.1	80		3610647500
			0.1 / 7.1	90		3610647600

Pressure regulators → Supplementary products

Fine setting valve

► Qn = 900 l/min ► Actuating element: Pedal ► internal thread, internal thread ► Poppet valve

Dimensions

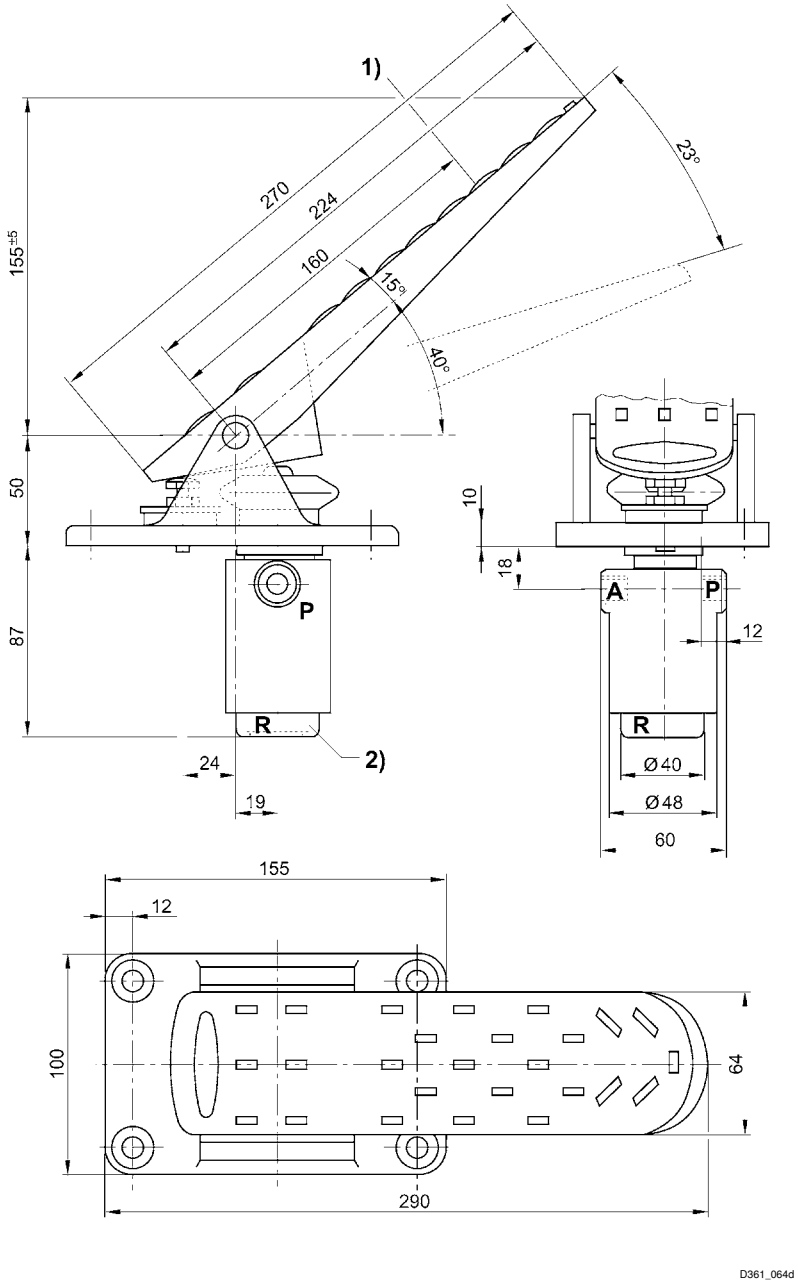

1) actuating force on the pedal
2) Screw cap
A = connection output
P = connection input
R = Port exhaust

Pressure regulators → Supplementary products

Fine setting valve

► Qn = 900 l/min ► Actuating element: Pedal ► internal thread, internal thread ► Poppet valve

Pressure characteristics curve

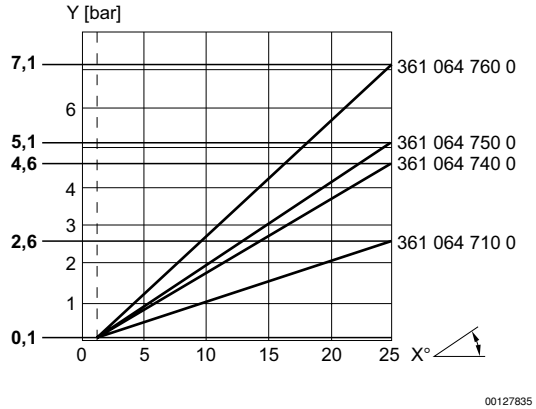

x = pedal path
The characteristic curve can be moved parallel to the illustrated characteristic curve (in the y direction) using the screw cap.

Nominal flow

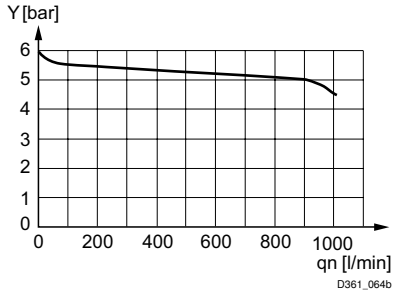

y: pressure in operating line ‘’A’’ [bar]

Cut-out in the mounting plate

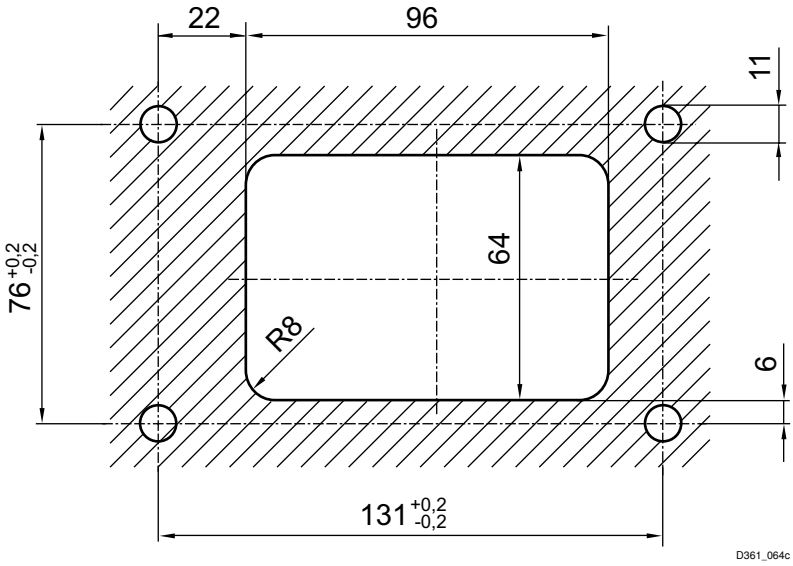

Mounting plate max. 7 mm thick