Valve systems → Supplementary products

Subbase, for direct mounting of ISO valves on cylinders

► standard: ISO 5599-1 ► Frame size: ISO 1 - ISO 2 ► compressed air connection output: G 1/8 - G 3/8

P523_014

Ambient temperature min./max.	-20°C / +70°C
Medium temperature min./max.	-20°C / +70°C
Medium	Compressed air
Working pressure min./max.	-1 bar / 16 bar
Surface	black anodized
Materials:	
Subbase	Aluminum, black anodized
Seals	Acrylonitrile Butadiene Rubber

Technical Remarks

- The pressure dew point must be at least 15 °C under ambient and medium temperature and may not exceed 3 °C.
- The oil content of air pressure must remain constant during the life cycle.
- Use only the approved oils from Bosch Rexroth, see chapter „Technical information“.

Frame size	Compressed air connection				Weight	Note	Part No.
	Input	Output	Exhaust	Pilot connection			
	[1]	[2 / 4]	[3 / 5]	[14]	[kg]		
ISO 1	G 1/8	G 1/8	G 1/8	G 1/8	0.175	1)	**5801690000**
ISO 2	G 3/8	G 3/8	G 3/8	G 1/8	0.58	2)	**5802690000**

1) Ø 32 - 125 mm
2) Ø 63 - 125 mm
Scope of delivery incl. mounting screws

Dimensions

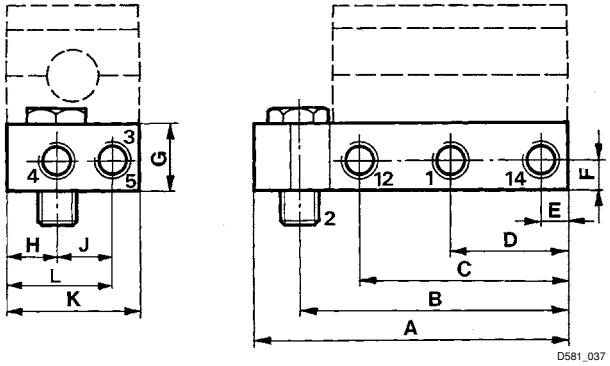

Part No.		1, 4, 3, (5)	2*	12, 14	A	B	C	D	E	F	G
5801690000	ISO 1	G 1/8	G 1/8, G 1/4	G 1/8	93.5	80	62	35	8	9	20
5802690000	ISO 2	G 3/8	G 3/8	G 1/8	127	109.5	81.5	46.5	11.5	13	32

Part No.	H	J	K	L								
5801690000	15	17	40	32								
5802690000	29	26	60	46.5								

* Two different threaded banjo bolts are supplied with 5801690000 to be used with different cylinders.