Cylinder accessories → piston rod mountings, series CM2

AP2, Rod clevis Galvanized steel

00105171

Fig.1

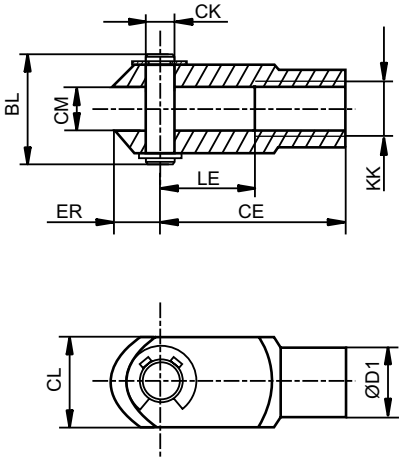

Fig. 2

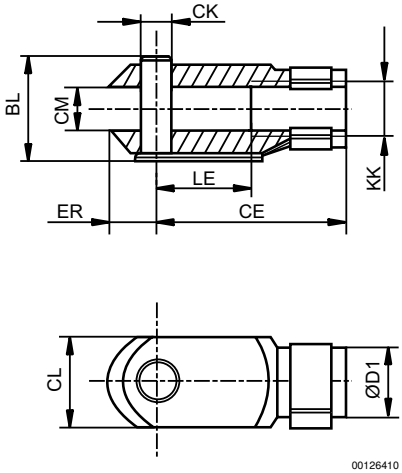

00126410

Part No.	KK	Fig.	BL	CE	ØCK e11	CL	CM	ØD1	ER	LE	Material
1822122028	M4	2	11	16	4	8	4	8	5	8	Steel
1822122008	M5	2	13.5	20	5	10	5	9	6	10	Steel
1822122009	M6	2	16	24	6	12	6	10	7	12	Steel
1822122010	M8	2	21,5	32	8	16	8	14	10	16	Steel
1822122024	M10x1,25	2	26	40	10	20	10	18	12	20	Steel
1822122025	M12x1,25	2	31	48	12	24	12	20	14	24	Steel
1822122005	M16x1,5	2	39	64	16	32	16	26	19	32	Steel
1822122004	M20x1,5	2	50	80	20	40	20	34	20	40	Steel
1827001493	M27x2	1	68	110	30	55	30	48	38	54	Steel
1827001471	M36x2	1	80	144	35	70	35	60	57	72	Steel
1827001472	M42x2	1	98	168	40	85	40	70	64	84	Steel
8958000122	M10	2	26	40	10	20	10	18	12	20	Steel
8958000132	M12	2	31	48	12	24	12	20	14	24	Steel

Part No.	Surface	Weight
		[kg]
1822122028	galva-nized	0.01
1822122008	galva-nized	0.01
1822122009	galva-nized	0.02
1822122010	galva-nized	0.05
1822122024	galva-nized	0.1
1822122025	galva-nized	0.16
1822122005	galva-nized	0.4
1822122004	galva-nized	0.7

AP2, Rod clevis Galvanized steel

Part No.	Surface	Weight										
		[kg]										
1827001493	galva-nized	2										
1827001471	galva-nized	4.35										
1827001472	galva-nized	6.6										
8958000122	galva-nized	0.1										
8958000132	galva-nized	0.16										