Pressure regulators → Supplementary products

Fine setting valve

► Qn = 900 l/min ► Actuating element: Push button ► additional pilot connection: G 1/4 ► internal thread, internal thread ► Poppet valve

3610-701

Working pressure min./max.	0.1 bar / 10 bar
Ambient temperature min./max.	-25°C / +70°C
Medium temperature min./max.	-25°C / +70°C
Medium	Compressed air
Qn	900 l/min
control stroke	7.5 mm
Hysteresis	< 0,15 bar
Materials:	
Housing	Die cast zinc
Seals	Acrylonitrile Butadiene Rubber

	Compressed air connection		Adjustment range min./max.	actuating force, min.	Weight	Part No.
	Input	Output				
			[bar]	[N]	[kg]	
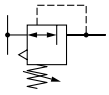	G 1/4	G 1/4	0.1 / 5.1	100	0.6	3610547500
operating force F[N] dependent on pressure in port A						

Dimensions

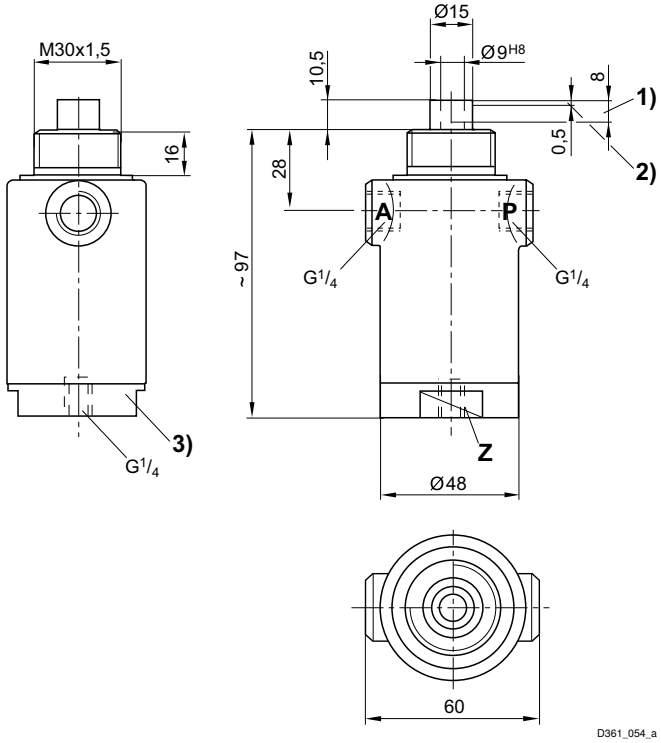

1) Stroke 2) Closing or exhaust stroke 3) Screw cap
A = connection output
P = connection input
Z = control line connection

Pressure regulators → Supplementary products

Fine setting valve

► Qn = 900 l/min ► Actuating element: Push button ► additional pilot connection: G 1/4 ► internal thread, internal thread ► Poppet valve

Pressure characteristics curve

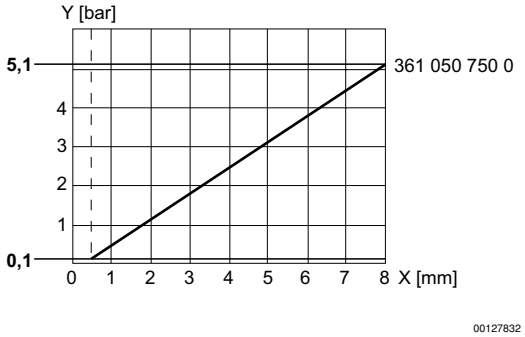

x = stroke
When pressurizing port Z, pressure in the operating line (port A) increases by the pressure applied at port Z. The pressure at port A may not exceed the pressure at port P.

Nominal flow

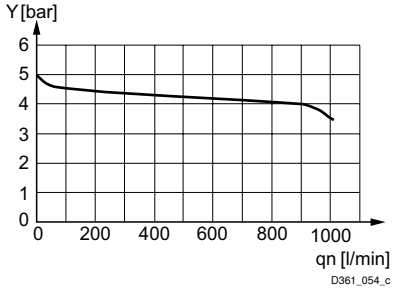

input pressure: 8 bar, supply pressure: 6 bar
y: pressure in line ‘‘A’’ [bar]