Rotary actuators → Rack-and-pinion gears

Rotary cylinder, Series TRR

► angle of rotation: 0 - 360 ° ► Ø32 - 100 mm ► with magnetic piston ► double piston with rack ► cushioning: pneumatically, adjustable

00106571

Working pressure min./max.	1.5 bar / 10 bar
Ambient temperature min./max.	-20°C / +80°C
Medium temperature min./max.	-20°C / +80°C
Medium	Compressed air
Max. particle size	5 µm
Oil content of compressed air	0 mg/m³ - 1 mg/m³
Theoretical torque at	6,3 bar
Materials:	
Housing	Aluminum
Covers	Die-cast aluminum
Seals	Polyurethane
Axis	Steel

Technical Remarks
■ The pressure dew point must be at least 15 °C under ambient and medium temperature and may not exceed 3 °C.

Frame size		TRR-32	TRR-40	TRR-50	TRR-63	TRR-80
Axis diameter	**[mm]**	**14**	**17**	**22**	**25**	**30**
Stroke/10° angle of rotation		2	2.2	2.6	3.5	3.9
Theoretical torque	[Nm]	4.5	7	14	29	53.5
Cushioning angle	[°]	61	69	65	49	56

Frame size		TRR-100				
Axis diameter	**[mm]**	**35**				
Stroke/10° angle of rotation		5.2				
Theoretical torque	[Nm]	111				
Cushioning angle	[°]	45				

Rotary actuators → Rack-and-pinion gears

Rotary cylinder, Series TRR

► angle of rotation: 0 - 360 ° ► Ø32 - 100 mm ► with magnetic piston ► double piston with rack ► cushioning: pneumatically, adjustable

	Frame size	Compressed air connection	angle of rotation	Rotation angle tolerance	Rotation angle setting	Tolerance in 0° position not under pressure	Direction of rotation	Max. play (radial)	Weight	Note	Part No.
			[°]			[°]		[°]	[kg]		
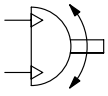	TRR-32	G 1/8	0 - 90	0° / +3°	-	-3.5° / +3.5°	Counter-clockwise	2.1	1.9	2)	**0822930204**
	TRR-32	G 1/8	0 - 180	0° / +3°	-	-3.5° / +3.5°		2.1	2.1	2)	**0822930205**
	TRR-32	G 1/8	0 - 360	0° / +3°	-	-3.5° / +3.5°		2.1	2.5	2)	**0822930206**
	TRR-40	G 1/4	0 - 90	0° / +3°	-	-3° / +3°		1.6	2.5	2)	**0822931204**
	TRR-40	G 1/4	0 - 180	0° / +3°	-	-3° / +3°		1.6	2.75	2)	**0822931205**
	TRR-40	G 1/4	0 - 360	0° / +3°	-	-3° / +3°		1.6	3.25	2)	0822931206
	TRR-50	G 1/4	0 - 90	0° / +6°	-	-3° / +3°		1.3	3.95	2)	**0822932204**
	TRR-50	G 1/4	0 - 180	0° / +6°	-	-3° / +3°		1.3	4.25	2)	**0822932205**
	TRR-50	G 1/4	0 - 360	0° / +6°	-	-3° / +3°		1.3	4.85	2)	0822932206
	TRR-50	G 1/4	0 - 90	-	-5° / +5°	-3° / +3°		1.3	4.1	1)	**0822932227**
	TRR-50	G 1/4	0 - 180	-	-5° / +5°	-3° / +3°		1.3	4.4	1)	**0822932228**
	TRR-50	G 1/4	0 - 360	-	-5° / +5°	-3° / +3°		1.3	5	1)	0822932229
	TRR-63	G 3/8	0 - 90	0° / +5°	-	-2° / +2°		1	5.9	2)	**0822933204**
	TRR-63	G 3/8	0 - 180	0° / +5°	-	-2° / +2°		1	6.3	2)	**0822933205**
	TRR-63	G 3/8	0 - 360	0° / +5°	-	-2° / +2°		1	7.1	2)	**0822933206**
	TRR-63	G 3/8	0 - 90	-	-5° / +5°	-2° / +2°		1	6.4	1)	**0822933227**
	TRR-63	G 3/8	0 - 180	-	-5° / +5°	-2° / +2°		1	6.8	1)	**0822933228**
	TRR-63	G 3/8	0 - 360	-	-5° / +5°	-2° / +2°		1	7.6	1)	0822933229
	TRR-80	G 3/8	0 - 90	0° / +4°	-	-2° / +2°		0.9	11.6	2)	0822934204
	TRR-80	G 3/8	0 - 180	0° / +4°	-	-2° / +2°		0.9	12.4	2)	**0822934205**
	TRR-80	G 3/8	0 - 360	0° / +4°	-	-2° / +2°		0.9	14	2)	0822934206
	TRR-80	G 3/8	0 - 90	-	-7° / +7°	-2° / +2°		0.9	12	1)	**0822934227**
	TRR-80	G 3/8	0 - 180	-	-7° / +7°	-2° / +2°		0.9	12.8	1)	**0822934228**
	TRR-80	G 3/8	0 - 360	-	-7° / +7°	-2° / +2°		0.9	14.4	1)	0822934229
	TRR-100	G 1/2	0 - 90	0° / +3°	-	-1.5° / +1.5°		0.75	15.5	2)	0822935204
	TRR-100	G 1/2	0 - 180	0° / +3°	-	-1.5° / +1.5°		0.75	16.7	2)	**0822935205**
	TRR-100	G 1/2	0 - 360	0° / +3°	-	-1.5° / +1.5°		0.75	19.1	2)	0822935206
	TRR-100	G 1/2	0 - 90	-	-7° / +7°	-1.5° / +1.5°		0.75	16.3	1)	0822935227
	TRR-100	G 1/2	0 - 180	-	-7° / +7°	-1.5° / +1.5°		0.75	17.5	1)	**0822935228**
	TRR-100	G 1/2	0 - 360	-	-7° / +7°	-1.5° / +1.5°		0.75	19.9	1)	0822935229

1) Adjustable angle of rotation
2) Non-adjustable angle of rotation

Rotary actuators → Rack-and-pinion gears

Rotary cylinder, Series TRR

► angle of rotation: 0 - 360 ° ► Ø32 - 100 mm ► with magnetic piston ► double piston with rack ► cushioning: pneumatically, adjustable

Rotation angle setting

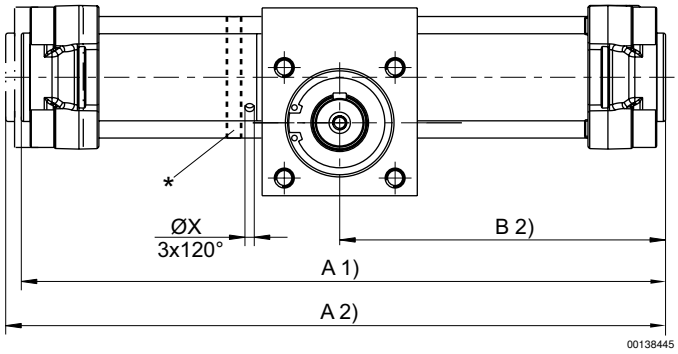

* Rotation angle setting via rotation of the setting ring.
The nuts of the tie rod must be loosened and tightened with the torque Ma.
0-position: parallel key on top (piston stop on the right).
Tightening torque TRR-50, TRR-63: 9-10 Nm
Tightening torque TRR-80, TRR-100: 18-20 Nm

Adjustable angle of rotation

Frame size	Ø	A 1) 90°	A 1) 180°	A 1) 360°	A 2) 90°	A 2) 180°	A 2) 360°	B 2) 90°	B 2) 180°	B 2) 360°	ØX		
TRR-50	50	292	339	434	299	345	440	150	173	220	4.2		
TRR-63	63	337	400	525	344	407	533	173	204	267	4.2		
TRR-80	80	388	458	600	399	470	611	200	235	306	4.2		
TRR-100	100	440	533	722	451	544	733	226	273	366	4.2		

1) Min.
2) Max.

Non-adjustable angle of rotation

Frame size	Ø	A 2) 90°	A 2) 180°	A 2) 360°	B 2) 90°	B 2) 180°	B 2) 360°	ØX					
TRR-32	32	251	285	357	126	143	179	–					
TRR-40	40	265	304	383	133	152	192	–					
TRR-50	50	295	342	436	148	171	218	–					
TRR-63	63	338	401	527	169	200	264	–					
TRR-80	80	390	460	602	195	230	301	–					
TRR-100	100	440	536	724	220	268	362	–					

2) Max.

Rotary actuators → Rack-and-pinion gears

Rotary cylinder, Series TRR

► angle of rotation: 0 - 360 ° ► Ø32 - 100 mm ► with magnetic piston ► double piston with rack ► cushioning: pneumatically, adjustable

Dimensions

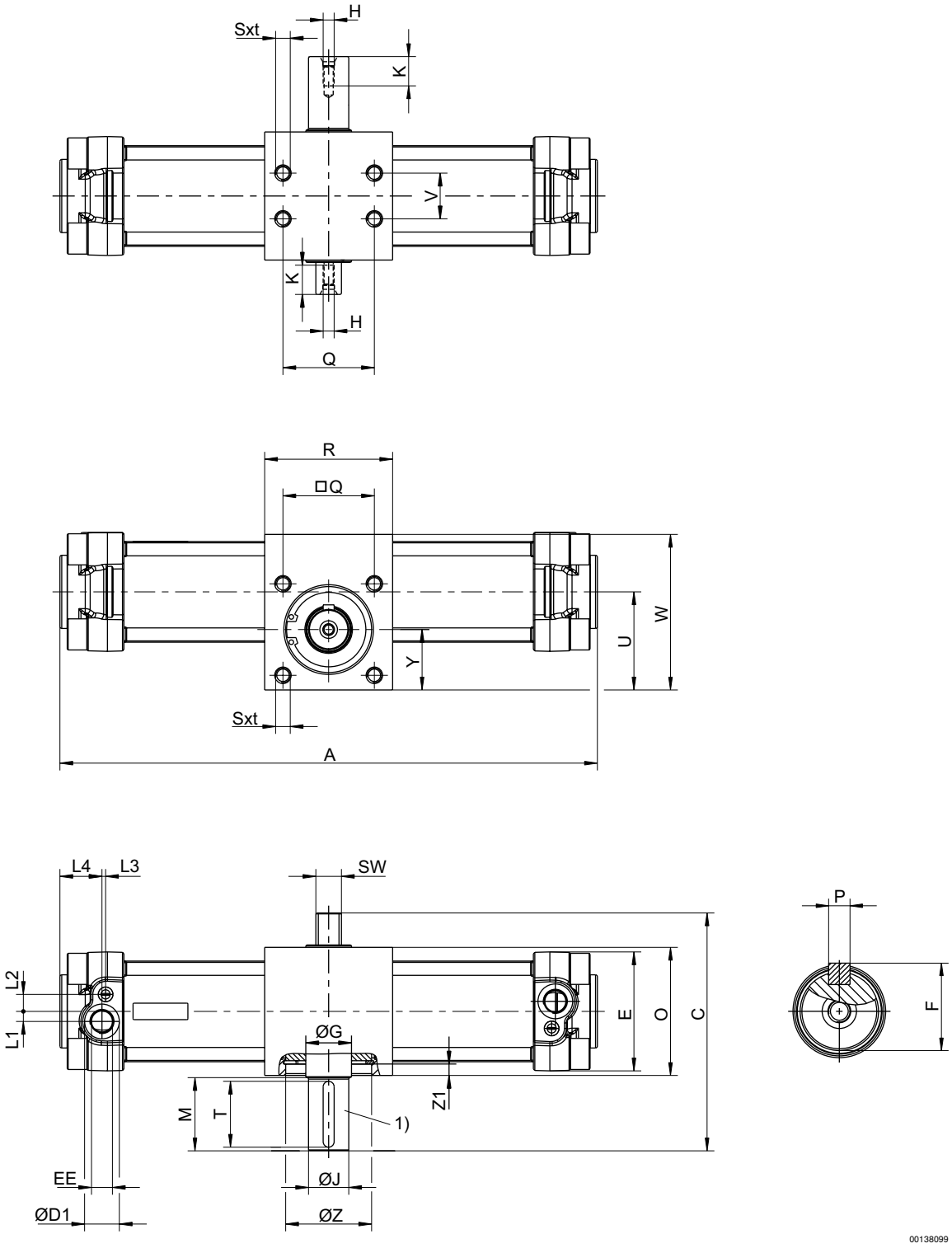

1) parallel key and groove dimensions as per DIN 6885

Rotary actuators → Rack-and-pinion gears

Rotary cylinder, Series TRR

► angle of rotation: 0 - 360 ° ► Ø32 - 100 mm ► with magnetic piston ► double piston with rack ► cushioning: pneumatically, adjustable

Frame size	Ø	C	ØD1	E	EE	F	ØG	H	ØJ k6	L1	L2	L3	L4
TRR-32	32	103.5	15	47	G 1/8	16	17	M5x12,5	14	5	7.5	4.2	20
TRR-40	40	110	19	53	G 1/4	19	20	M5x12,5	17	5.5	9.5	5.2	24
TRR-50	50	130	19	65	G 1/4	24.5	25	M6x16	22	5.5	9.3	2	23
TRR-63	63	142.5	23	75	G 3/8	28	30	M8x19	25	9	11.7	2	28
TRR-80	80	175	23	95	G 3/8	33	35	M8x19	30	8	15	2.5	28
TRR-100	100	190	27	115	G 1/2	38	40	M10x22	35	12	14	4	29

Frame size	M	O	P	Q	R	Sxt	SW	U	V	W	Y	ØZ H7	Z1
TRR-32	30	55	5x25	33	63	M6x9	11	40.7	18	63	25	35	4
TRR-40	30	60	5x25	40	70	M6x9	13	43.5	22	70	26.5	42	4.25
TRR-50	40	70	6x36	50	70	M8x12	14	53.5	25	85	33	47	6.25
TRR-63	40	80	8x36	60	80	M8x12	17	65	35	105	40	55	7
TRR-80	50	100	8x45	80	106	M10x15	22	84.5	50	135	53	62	9.5
TRR-100	50	114	10x45	80	125	M10x15	22	91.5	60	150	53	80	16.5
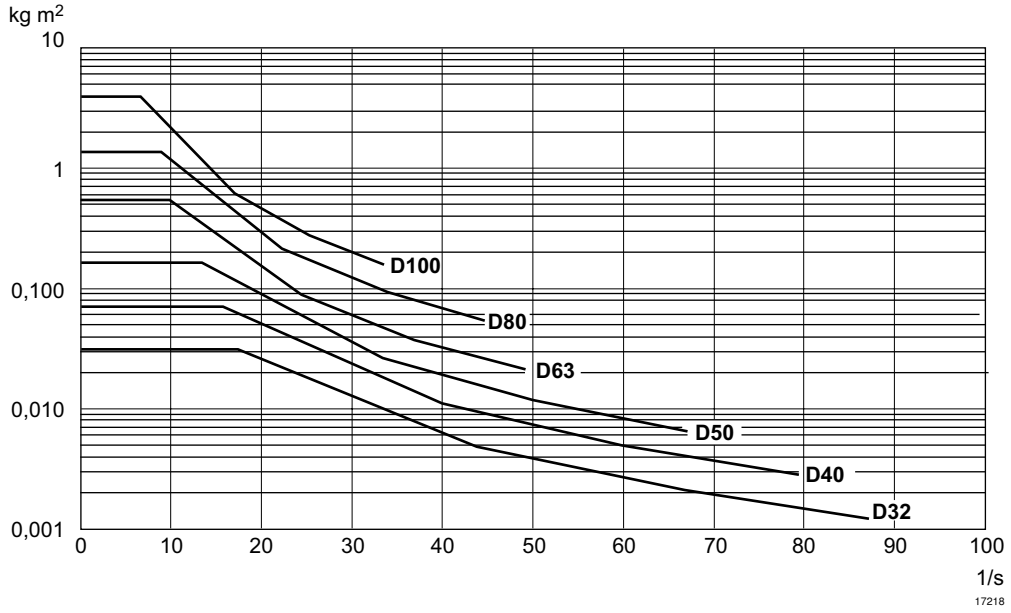
Permissible mass moment of inertia (kg m²) depending on size and angular velocity (per second)