Vacuum filter, cup version, Series VFC

► G 1/8 - G 3/4 ► filter porosity: 80 µm

00112446_1

Version	Vacuum filter
Medium	Compressed air
Ambient temperature min./max.	+5°C / +52°C
Filter element	exchangeable
filter porosity	80 µm
Materials:	
Housing	Polypropylene
Seals	Acrylonitrile Butadiene Rubber
Reservoir	Polyamide
Filter insert	Polyethylene

	Port	Qn	Reservoir	Weight	Part No.
		[l/min]		[kg]	
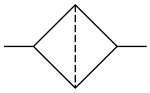	G 1/8	45	Polyamide	0.049	0821305181
	G 1/4	110		0.047	**0821305182**
	G 3/8	245		0.079	0821305183
	G 1/2	300		0.076	**0821305184**
	G 3/4	600		0.164	**0821305185**
Nominal flow at Δp = 40 mbar					

Gripper and vacuum technology → Vacuum accessories

Vacuum filter, cup version, Series VFC

► G 1/8 - G 3/4 ► filter porosity: 80 µm

characteristics (flow volume)

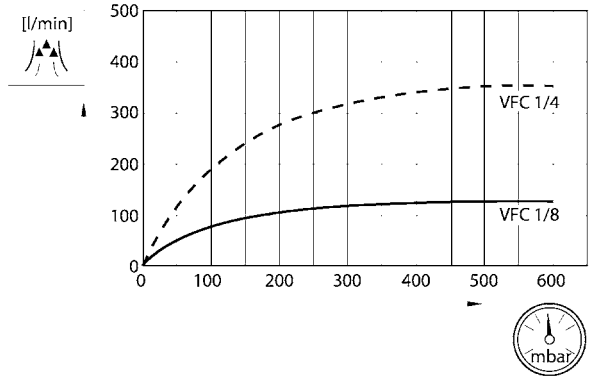

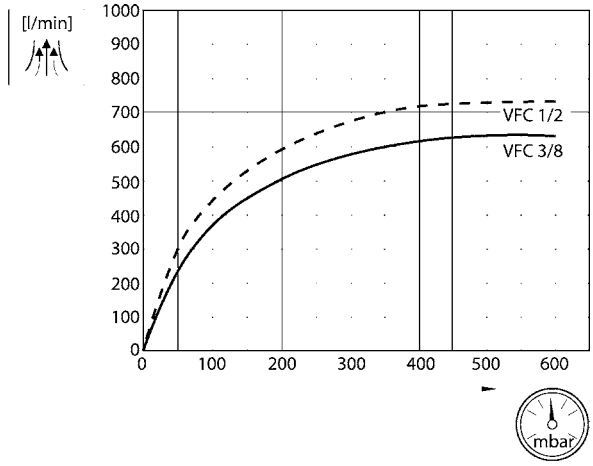

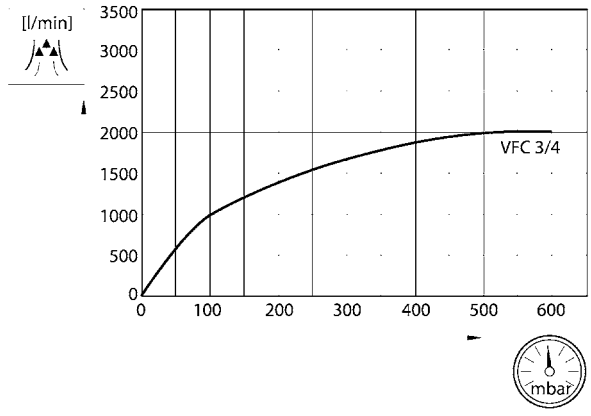

00115823

Dimensions

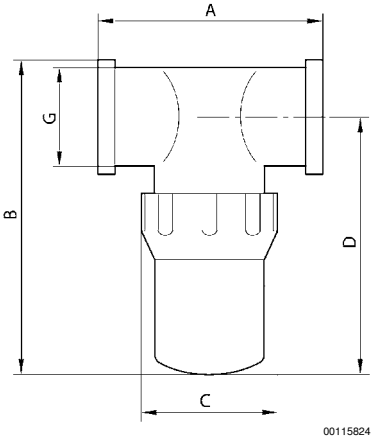

Part No.	Port G	G	A	B	C	D						
0821305181	G 1/8	G 1/8	76	60	48	50						

Vacuum filter, cup version, Series VFC

► G 1/8 - G 3/4 ► filter porosity: 80 µm

Part No.	Port G	G	A	B	C	D						
0821305182	G 1/4	G 1/4	76	60	48	50						
0821305183	G 3/8	G 3/8	76	102	48	88						
0821305184	G 1/2	G 1/2	76	102	48	88						
0821305185	G 3/4	G 3/4	90.5	136.5	74.2	118						