Electrical connection technologies → Electrical connection technologies

Electrical connectors, Series CN1

► ISO 6952 ► Electrical connector, form B

Ambient temperature min./max.	-25°C / +40°C
Protection class	IP 65
Cable fitting	M16x1,5
mounting screw tightening torque	0.4 Nm

00110264_b

	Operating voltage		Max. current	Contact assign-ment	Cable exit	Protective circuit	suitable cable-Ø min./ max	Part No.
	DC	AC						
	[V]	[V]	[A]				[mm]	
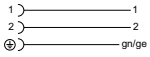	300	-	10	2+E	angled 90°	-	5 / 8	**1834484096**
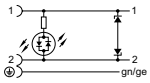	24	24	-	2+E	angled 90°	Z-diode	5 / 8	**1834484104**
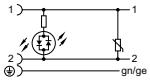	-	110 230	-	2+E	angled 90°	Varistor	5 / 8	**1834484105** **1834484106**

Part No.	number of plug options 1	LED status display	Housing color	Weight	Fig.	Note
				[kg]		
1834484096	2 positions each 180°	-	Black	0.02	Fig. 1	1); 3)
1834484104	2 positions each 180°	Yellow	Transparent	0.02	Fig. 2	1); 4)
1834484105 **1834484106**	2 positions each 180°	Red	Transparent	0.02	Fig. 2	1); 4) 2); 4)

1) Profile seal
2) Flat gasket
3) Seal: caoutchouc/butadiene caoutchouc
4) Seal: Silicone caoutchouc

Fig. 1

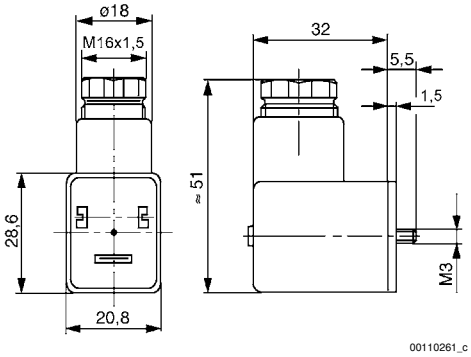

Electrical connectors, Series CN1

► ISO 6952 ► Electrical connector, form B
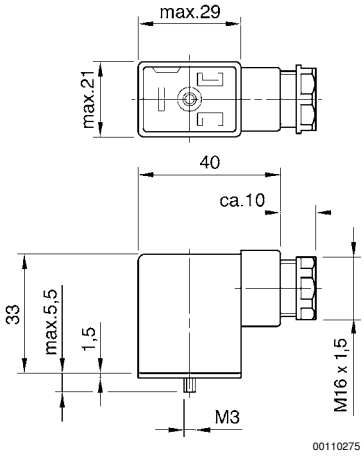
Fig. 2