Sensor technologies → Supplementary products

Series MS01

► MS01-PA test block, variant II, with 5/2-way-valve ► subbase made of Polyamide, fiber-glass reinforced
► permanent cleaning pressure

00132495

Standards	ISO 15407-1, 26 mm
Grid dimension	27 mm
Working pressure min./max.	4 bar / 10 bar
Ambient temperature min./max.	+0°C / +50°C
Medium temperature min./max.	+0°C / +50°C
Protection class:with electrical connector	IP 65
Duty cycle	100 %
Medium	Compressed air
Max. particle size	5 µm
Oil content of compressed air	0 mg/m³ - 0.1 mg/m³
Electrical connection for valve	Plug, form C
Electrical connection for test module	Plug, M12, 5-pin
DC operating voltage	24 V
Voltage tolerance DC	-10% / +10%
Valve voltage tolerance	-10% / +10%
Materials:	
End plates	Aluminum
Seal	Acrylonitrile Butadiene Rubber
Subbase	Polyamide, fiber-glass reinforced

Technical Remarks

- The pressure dew point must be at least 15 °C under ambient and medium temperature and may not exceed 3 °C.
- The oil content of air pressure must remain constant during the life cycle.
- Use only the approved oils from Bosch Rexroth, see chapter „Technical information“.
- The pressure regulator is preset at 3 bar.
- Expansion options available for pilot valves.

Version	input 1	Exhaust R1	Output 4	pilot control R2 exhaust	Min./max. detection distance	Length	Weight	Part No.
					[mm]	[mm]	[kg]	
1x	G 1/4	G 1/8	Ø6x1	G 1/8	0.01 / 0.3	88	1.52	R412003461
2x	G 1/4	G 1/8	Ø6x1	G 1/8	0.01 / 0.3	115	1.932	R412003462
3x	G 1/4	G 1/8	Ø6x1	G 1/8	0.01 / 0.3	142	2.344	R412003463
4x	G 1/4	G 1/8	Ø6x1	G 1/8	0.01 / 0.3	169	2.756	R412003464
5x	G 1/4	G 1/8	Ø6x1	G 1/8	0.01 / 0.3	196	3.168	R412003465
6x	G 1/4	G 1/8	Ø6x1	G 1/8	0.01 / 0.3	223	3.58	R412003466
7x	G 1/4	G 1/8	Ø6x1	G 1/8	0.01 / 0.3	250	3.992	R412011212
8x	G 1/4	G 1/8	Ø6x1	G 1/8	0.01 / 0.3	277	4.404	R412011213

port pneumatic: according to ISO 228-1
The detection distance is based on one measuring point per test module and depends on the operating conditions. For more information, see operating instructions.

Sensor technologies → Supplementary products

Series MS01

► MS01-PA test block, variant II, with 5/2-way-valve ► subbase made of Polyamide, fiber-glass reinforced
► permanent cleaning pressure

Dimensions

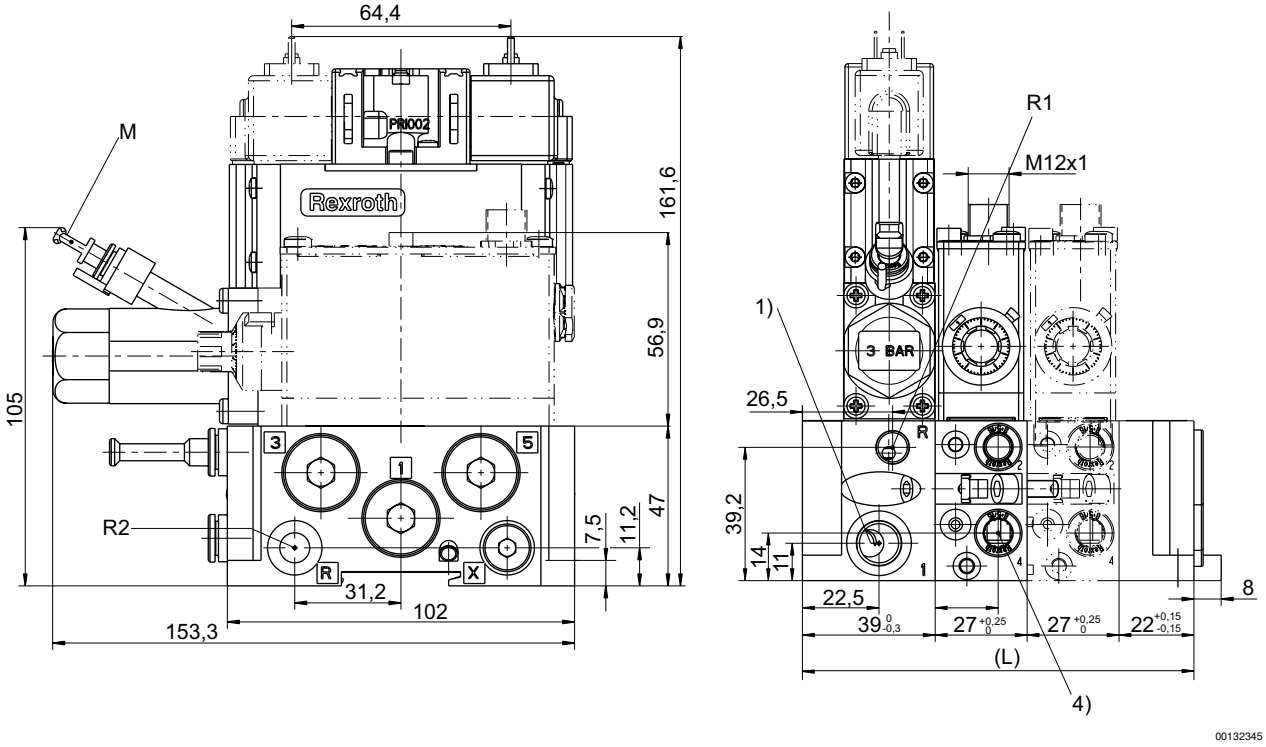

1) Operating pressure
4) Port 4 (to nozzle)
R1) Test module exhaust/sealing air connection (max. 1 bar)
R2) Pilot control exhaust
M) plug-in connection for plastic pipe Ø 6x1 of pressure gauge
L = length

Sensor technologies → Supplementary products

Series MS01

► MS01-PA test block, variant II, with 5/2-way-valve ► subbase made of Polyamide, fiber-glass reinforced ► permanent cleaning pressure

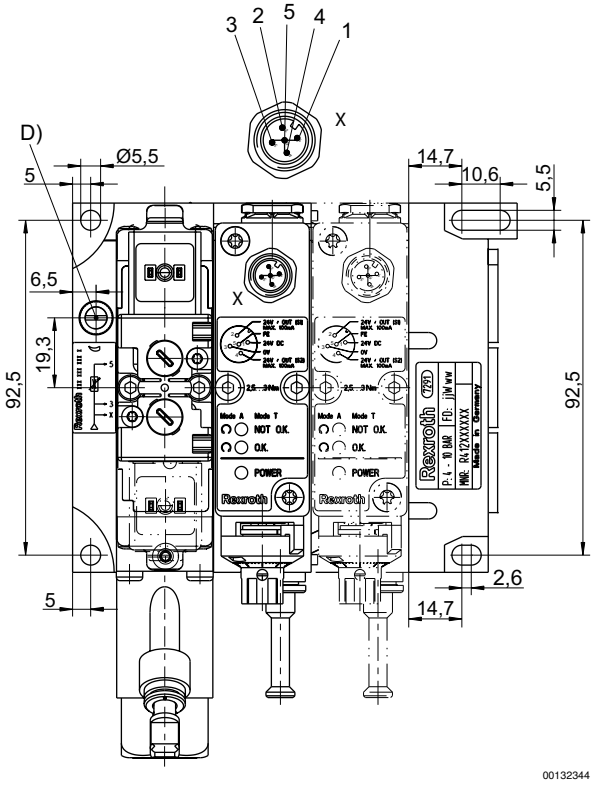

D = Throttle (cleaning pressure)
M12 contact assignment:
contact 1: 24 V DC
contact 2: output signal 24 V DC, S1 (working pressure), max. 100 mA
contact 3: 0 V
contact 4: output signal 24 V DC, S2 (testing), max. 100 mA
contact 5: FE

circuit diagram

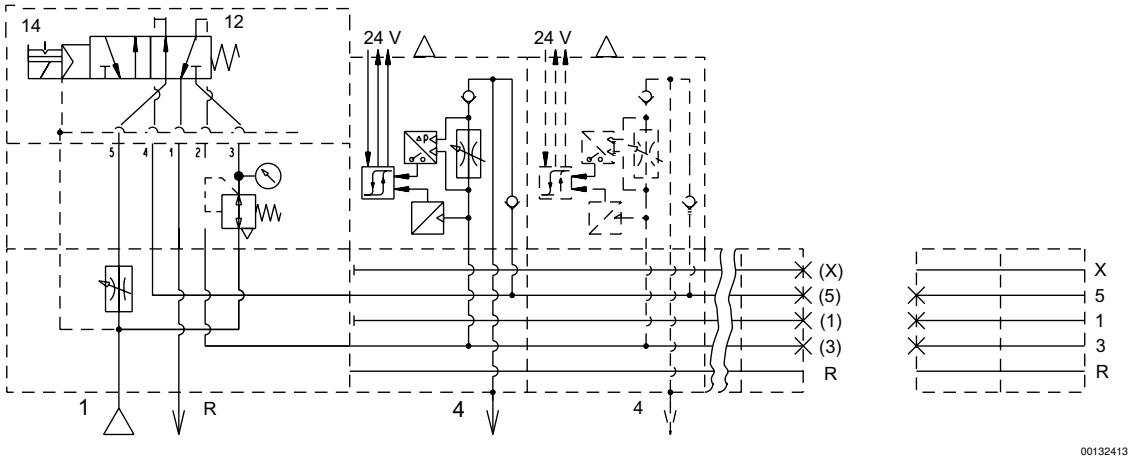

Valve side 14: test pressure
Port 4: connection nozzle
valve side 12: cleaning pressure
port R: exhaust (see dimensions for R1 and R2)