Piston rod cylinder →

Mini cylinder, ISO 6432, Series OCT

► Ø 12 - 25 mm ► Ports: M5 - G 1/8 ► double-acting ► with magnetic piston ► cushioning: pneumatically, adjustable ► with integrated rear eye ► Piston rod: external thread

00118479

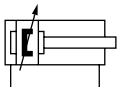

a15

Standards	ISO 6432
Compressed air connection	internal thread
Working pressure min./max.	1.5 bar / 10 bar
Ambient temperature min./max.	-20°C / +75°C
Medium temperature min./max.	-20°C / +75°C
Medium	Compressed air
Max. particle size	50 µm
Oil content of compressed air	0 mg/m³ - 5 mg/m³
Pressure for determining piston forces	6,3 bar

Materials:	
Cylinder tube	Aluminum, anodized
Piston rod	Stainless steel
Front cover	Polyarylamide
End cover	Polyarylamide
Seal	Polyurethane
Nut for cylinder mounting	Aluminum, anodized
Nut for piston rod	Stainless steel
Scraper	Polyester urethane rubber

Technical Remarks

- The pressure dew point must be at least 15 °C under ambient and medium temperature and may not exceed 3 °C.
- The oil content of compressed air must remain constant during the life cycle.
- Use only the approved oils from Bosch Rexroth, see chapter „Technical information“.
- Clamping piece for magnetic field sensor necessary

Piston Ø		**[mm]**	**12**	**16**	**20**	**25**
Retracting piston force		[N]	64	130	195	259
Extracting piston force		[N]	81	148	227	309
Cushioning length		[mm]	10	10	13	16
Cushioning energy		[J]	0.5	0.6	1.5	2.3
Weight	0 mm stroke	[kg]	0.058	0.07	0.122	0.168
	+10 mm stroke	[kg]	0.007	0.007	0.009	0.012
Stroke max.		[mm]	600	950	1100	1300

Supplementary products
Part numbers marked in bold are available from the central warehouse in Germany, see the shopping basket for more detailed information

Piston rod cylinder →

Mini cylinder, ISO 6432, Series OCT

► Ø 12 - 25 mm ► Ports: M5 - G 1/8 ► double-acting ► with magnetic piston ► cushioning: pneumatically, adjustable ► with integrated rear eye ► Piston rod: external thread

	Piston Ø Piston rod thread Ports Cylinder outer thread	12 M6 M5 M16x1,5	16 M6 M5 M16x1,5	20 M8 G 1/8 M22x1,5	25 M10x1,25 G 1/8 M22x1,5	
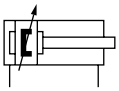	Stroke 10	R480048012	**5283110020**	**5284110020**	**5285110020**	
	25	**R480049524**	**5283110050**	**5284110050**	**5285110050**	
	50	**R480049527**	**5283110100**	**5284110100**	**5285110100**	
	80	R480049531	**5283110160**	**5284110160**	**5285110160**	
	100	R480049532	**5283110200**	**5284110200**	**5285110200**	
	125	**R480049533**	**5283110250**	**5284110250**	**5285110250**	
	160	R480049535	**5283110320**	**5284110320**	**5285110320**	
	200	R480049536	**5283110400**	**5284110400**	**5285110400**	
	250	R480049537	**5283110500**	5284110500	**5285110500**	
	320	R480049539	**5283110640**	**5284110640**	**5285110640**	
	400	R480049540	5283110800	5284110800	**5285110800**	
	500	R480049541	5283111000	**5284111000**	**5285111000**	

Configurable product	
	This product is configurable. Please use our Internet configurator at www.boschrexroth.com/pneumatics or contact the nearest Bosch Rexroth sales office.

Piston Ø 12 - 25

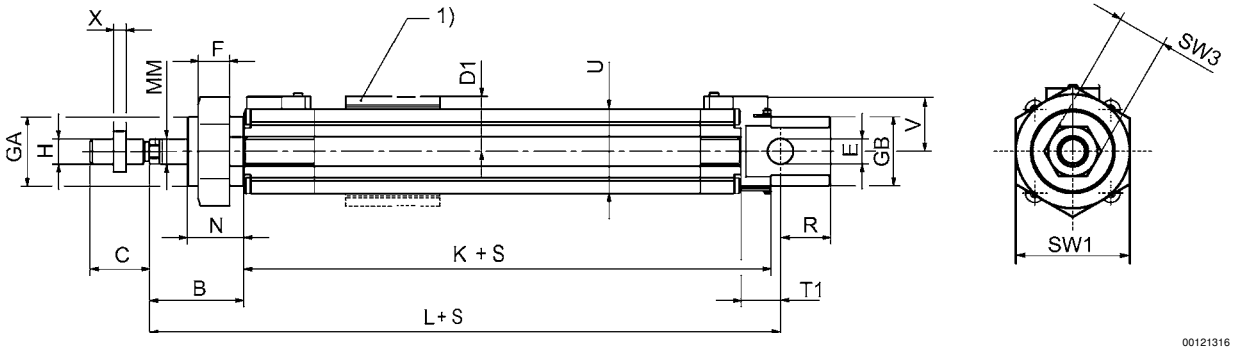

Piston Ø 12

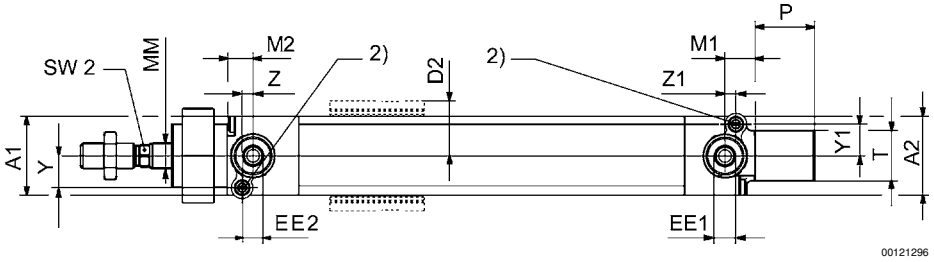

Piston rod cylinder →

Mini cylinder, ISO 6432, Series OCT

► Ø 12 - 25 mm ► Ports: M5 - G 1/8 ► double-acting ► with magnetic piston ► cushioning: pneumatically, adjustable ► with integrated rear eye ► Piston rod: external thread

Piston Ø 16 - 25

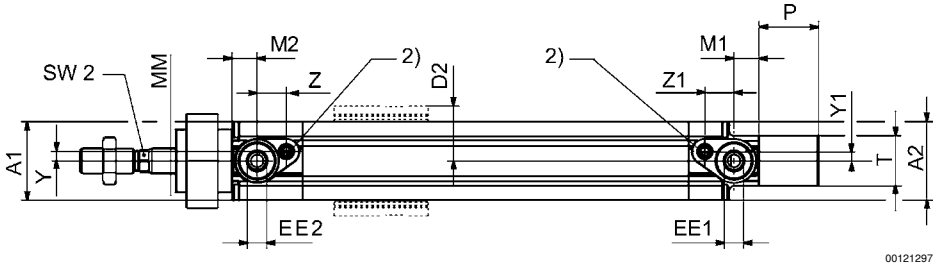

1) Clamp for sensor - installation at all 4 cylinder sides (Ø 12 mm at 3 sides) possible
2) Slot for cushioning screw 0.8 mm
S = stroke

Piston Ø	A1/A2	B	C –2	D1/D2	E H9	EE1/EE2	F	GA/GB	H	K	L	M1/M2
12	19	22	15	14.5	6	M5	8	M16x1,5	M6	46	75	8
16	21	22	15	15.5	6	M5	8	M16x1,5	M6	56	82	6
20	25	24	19	17.5	8	G 1/8	10	M22x1,5	M8	68	95	8
25	28.5	28	21	19.25	8	G 1/8	10	M22x1,5	M10x1,25	70	104	8

Piston Ø	MM	N	P	R	T d13	T1	U	V	X	SW1	SW2	SW3	Z/Z1
12	6	17	17	10	12	9	19	14	3.2	22	5	10	2.5
16	6	16	17	13	12	9	23	15.8	3	22	5	10	6.6
20	8	18	19	16	16	12.5	27	17.5	4	30	7	13	9.3
25	10	21	21	15	16	12.5	30	18.8	5	30	9	17	9.3

Piston Ø	Y/Y1												
12	7												
16	2.4												
20	3												
25	3												