Cylinder accessories → Cylinder mountings; series CM1

CS7, angled

► Cylinder mounting in accordance with VDMA 24562 part 2

00105817

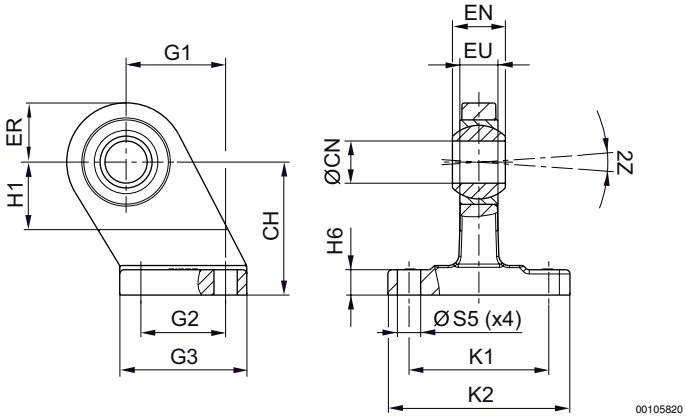

Part No.	Piston Ø	CH JS15	ØCN H7	EU 1)	EN -1,0	ER 1)	G1 JS14	G2 JS14	G3 1)	H1 2)	H6	K1 JS14
1827001784	32	32	10	10.5	14	16	21	18	31	16	9 ±1	38
1827001785	40	36	12	12	16	18	24	22	35	20	9 ±1	41
1827001786	50	45	16	15	21	21	33	30	45	22	11 ±1	50
1827001787	63	50	16	15	21	23	37	35	50	27	11 ±1	52
1827001788	80	63	20	18	25	28	47	40	60	31	12 ±1,5	66
1827001789	100	71	20	18	25	30	55	50	70	38	13 ±1,5	76
1827001790	125	90	30	25	37	40	70	60	90	40	17 ±1,5	94
1827001791	160	115	35	28	43	44	97	88	126	45	22 ±1,5	118
1827001792	200	135	35	28	43	47	105	90	130	45	27 ±2	122
1827001793	250	165	40	33	49	53	128	110	160	50	31 ±2	150
5239013442	320	200	50	45	60	63	150	122	186	60	36 ±2	170

Part No.	K2 1)	ØS5 H13	Z 2)	Material	Surface						
1827001784	51	6.6	4°	Nodular graphite iron	galvanized						
1827001785	54	6.6	4°	Nodular graphite iron	galvanized						
1827001786	65	9	4°	Nodular graphite iron	galvanized						
1827001787	67	9	4°	Nodular graphite iron	galvanized						
1827001788	86	11	4°	Nodular graphite iron	galvanized						
1827001789	96	11	4°	Nodular graphite iron	galvanized						
1827001790	124	14	4°	Nodular graphite iron	galvanized						
1827001791	1556	14	4°	Nodular graphite iron	galvanized						
1827001792	162	18	4°	Nodular graphite iron	galvanized						
1827001793	200	22	4°	Nodular graphite iron	galvanized						
5239013442	234	26	4°	Nodular graphite iron	galvanized						

1) Max.
2) Min.

Part numbers marked in bold are available from the central warehouse in Germany, see the shopping basket for more detailed information