Piston rod cylinder → Standard cylinders

Profile cylinder, ISO 15552, Series PRA

► Ø 32 - 125 mm ► Ports: G 1/8 - G 1/2 ► double-acting ► heat resistant ► cushioning: pneumatically, adjustable ► Piston rod: external thread ► silicone-free

00134193

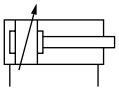

a5

Standards	ISO 15552
Compressed air connection	internal thread
Working pressure min./max.	1.5 bar / 10 bar
Ambient temperature min./max.	-10°C / +150°C
Medium temperature min./max.	-10°C / +150°C
Medium	Compressed air
Max. particle size	50 µm
Oil content of compressed air	0 mg/m³ - 5 mg/m³
Pressure for determining piston forces	6,3 bar

Materials:	
Cylinder tube	Aluminum, anodized
Piston rod	Stainless steel
Front cover	Die-cast aluminum
End cover	Die-cast aluminum
Seal	Fluorocaoutchouc
Nut for piston rod	Steel, galvanized
Scraper	Fluorocaoutchouc

Technical Remarks

- The pressure dew point must be at least 15 °C under ambient and medium temperature and may not exceed 3 °C.
- The oil content of compressed air must remain constant during the life cycle.
- Use only the approved oils from Bosch Rexroth, see chapter „Technical information“.

Piston Ø		**[mm]**	**32**	**40**	**50**	**63**	**80**
Retracting piston force		[N]	435	660	1035	1765	2855
Extracting piston force		[N]	505	790	1235	1960	3165
Cushioning length		[mm]	11.5	15	17	16.5	19.5
Cushioning energy		[J]	4.8	9	15	27	54
Weight	0 mm stroke	[kg]	0.5	0.65	1.06	1.42	2.37
	+10 mm stroke	[kg]	0.022	0.032	0.047	0.054	0.085
Stroke max.		[mm]	1600	1900	2100	2500	2800

Piston Ø		**[mm]**	**100**	**125**			
Retracting piston force		[N]	4635	7220			
Extracting piston force		[N]	4945	7725			
Cushioning length		[mm]	19.5	22			
Cushioning energy		[J]	88	140			
Weight	0 mm stroke	[kg]	3.51	6.72			
	+10 mm stroke	[kg]	0.1	0.15			
Stroke max.		[mm]	2800	2750			

Piston rod cylinder → Standard cylinders

Profile cylinder, ISO 15552, Series PRA

► Ø 32 - 125 mm ► Ports: G 1/8 - G 1/2 ► double-acting ► heat resistant ► cushioning: pneumatically, adjustable ► Piston rod: external thread ► silicone-free

	Piston Ø **Piston rod thread** **Ports** **Piston rod Ø**	**32** **M10x1,25** **G 1/8** **12**	**40** **M12x1,25** **G 1/4** **16**	**50** **M16x1,5** **G 1/4** **20**	**63** **M16x1,5** **G 3/8** **20**	**80** **M20x1,5** **G 3/8** **25**
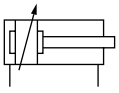	Stroke 25	R480144202	R480041108	R480147979	**R480147990**	R480144198
	50	R480147959	R480147968	R480147980	R480147991	R480148001
	80	R480040989	R480147969	**R480147981**	**R480147992**	R480148002
	100	**R480147960**	R480147970	**R480147982**	R480147993	**R480147611**
	125	R480147961	R480147971	R480147983	**R480147994**	R480148003
	160	R480147962	R480147972	R480147984	R480147995	R480148004
	200	R480147963	R480147973	R480147985	**R480144714**	R480147052
	250	R480147964	R480147974	R480147986	R480147996	R480148005
	320	R480147965	R480147975	R480147987	R480147997	R480146313
	400	R480147966	R480147976	R480147988	R480147998	R480042946
	500	R480147967	R480147977	R480147989	R480147999	R480148009
	Piston Ø **Piston rod thread** **Ports** **Piston rod Ø**	**100** **M20x1,5** **G 1/2** **25**	**125** **M27x2** **G 1/2** **32**			
	Stroke 25	R480148011	R480170695			
	50	R480148012	R480157264			
	80	R480148013	R480163258			
	100	R480148014	R480153677			
	125	R480148015	R480155595			
	160	R480148016	R480170774			
	200	R480148017	R480165969			
	250	R480148018	R480158304			
	320	R480148019	R480170775			
	400	R480148020	R480170776			
	500	R480147194	R480149365			

Configurable product	
	This product is configurable. Please use our Internet configurator at www.boschrexroth.com/pneumatics or contact the nearest Bosch Rexroth sales office.

Piston rod cylinder → Standard cylinders

Profile cylinder, ISO 15552, Series PRA

► Ø 32 - 125 mm ► Ports: G 1/8 - G 1/2 ► double-acting ► heat resistant ► cushioning: pneumatically, adjustable ► Piston rod: external thread ► silicone-free

Cushioning diagram

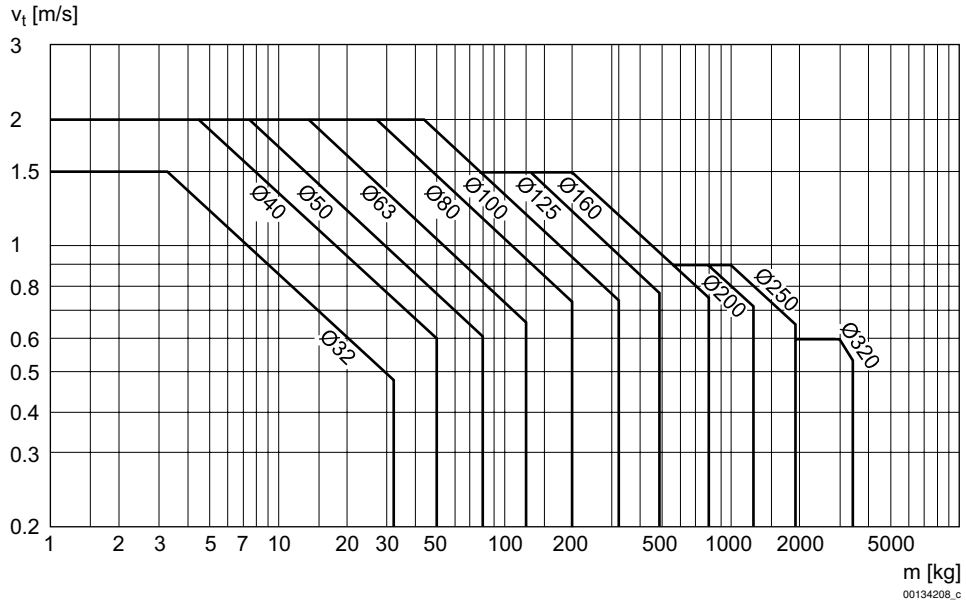

v = Piston velocity [m/s]
m = Cushionable mass [kg]

Dimensions

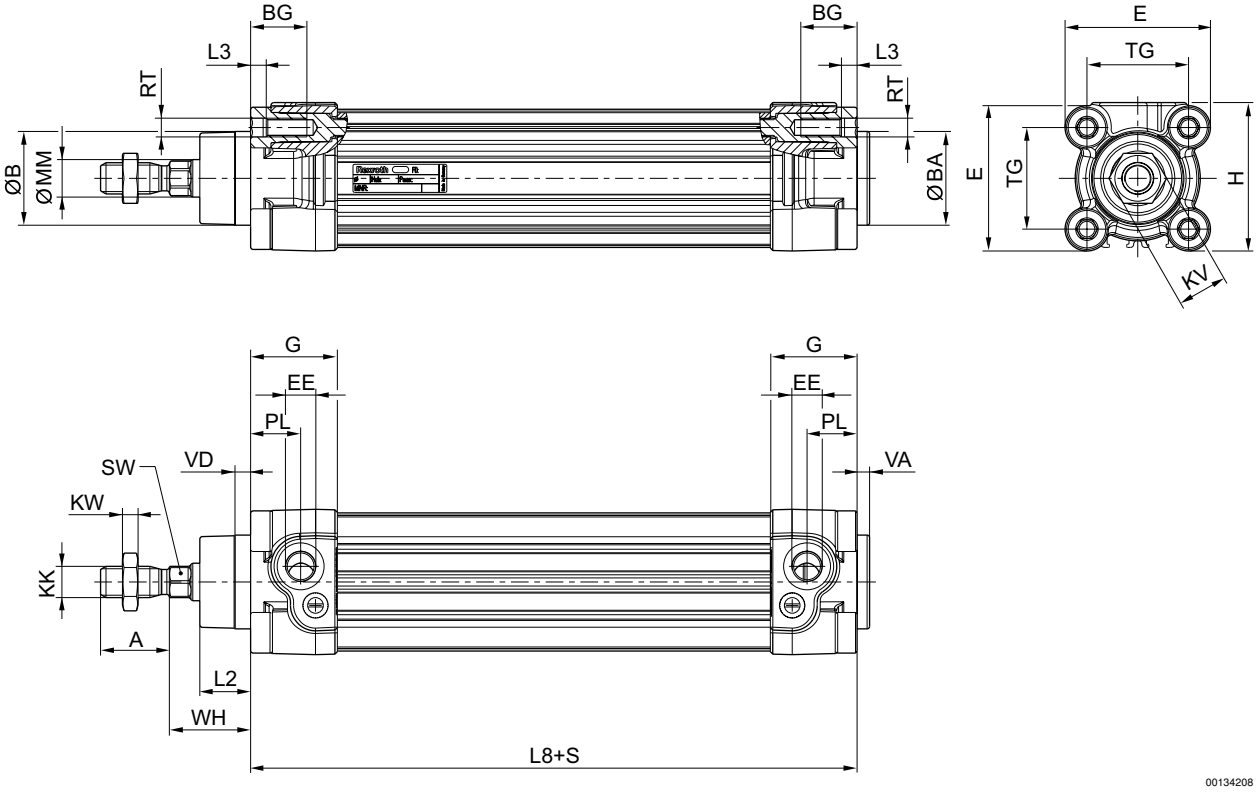

S = stroke

Piston rod cylinder → Standard cylinders

Profile cylinder, ISO 15552, Series PRA

► Ø 32 - 125 mm ► Ports: G 1/8 - G 1/2 ► double-acting ► heat resistant ► cushioning: pneumatically, adjustable ► Piston rod: external thread ► silicone-free

Piston Ø	A -2	AF+1	ØB d11	ØBA d11	BG min.	E	EE	G	H	KF	KK
32	22	12	30	30	16	46.5	G 1/8	27.75	47.5	M6	M10x1,25
40	24	13.5	35	35	16	53	G 1/4	33.25	53	M8	M12x1,25
50	32	17	40	40	16	65	G 1/4	31	65	M10	M16x1,5
63	32	17	45	45	16	75	G 3/8	38.25	75	M10	M16x1,5
80	40	21	45	45	17	95	G 3/8	38.25	95	M12	M20x1,5
100	40	21	55	55	17	115	G 1/2	42.25	115	M12	M20x1,5
125	54	28	60	60	20	140	G 1/2	53.85	140	M16	M27x2

Piston Ø	KV	KW	ØMM f8	PL	L2	L3 ±0,5	L8	RT	SW	TG	VA -1	VD
32	16	5	12	16	16.25	4.5	94±0,4	M6	10	32,5±0,5	4	5
40	18	6	16	20	18.25	4.5	105±0,7	M6	13	38±0,5	4	5
50	24	8	20	19	25	4.5	106±0,7	M8	17	46,5±0,6	4	5
63	24	8	20	24	25	4.5	121±0,8	M8	17	56,5±0,7	4	5
80	30	10	25	23.5	33	0	128±0,8	M10	22	72±0,7	4	5
100	30	10	25	25	36	0	138±1	M10	22	89±0,7	4	5
125	41	13.5	32	33	45	0	160±1	M12	27	110±1,1	6	7

Piston Ø	WH												
32	26±1,4												
40	30±1,4												
50	37±1,4												
63	37±1,8												
80	46±1,8												
100	51±1,8												
125	65±2,2												