Preparation of compressed air → Maintenance units and components

Filling valve, pneumatically operated, with electrical priority circuit, Series AS2-SSV

► G 1/4

00134293_a

Version	Poppet valve with elect. priority circuit, Can be assembled into blocks
Working pressure min./max.	2.5 bar / 10 bar
Medium	Compressed air
Medium temperature min./max.	-10°C / +50°C
Ambient temperature min./max.	-10°C / +50°C
Sealing principle	soft sealing
Max. particle size	25 µm
Degree of protection,withPlug	IP 65
Einschaltdauer	100 %
Materials:	
Housing	Polyamide
Front plate	Acrylonitrile butadiene styrene
Seals	Acrylonitrile Butadiene Rubber
Threaded bushing	Die cast zinc

Technical Remarks

- The pressure dew point must be at least 15 °C under ambient and medium temperature and may not exceed 3 °C.
- Builds up pressure slowly in the pneumatic systems, i.e. prevents a sudden pressure build-up during a restart after a mains pressure failure or avoids emergency OFF switching. This also avoids dangerous, jerky cylinder movements.
- Actuating the electric priority circuit disrupts the slow pressure build-up and pressure p1 is immediately applied.

		Port	Qn	Weight	Part No.
			[l/min]	[kg]	
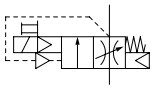		G 1/4	2000	0.203	**R412006379**
Electr. connection: M12x1 electrical connector Nominal flow Qn at p1 = 6.3 bar and Δp = 1 bar					

Secondary pressure while filling

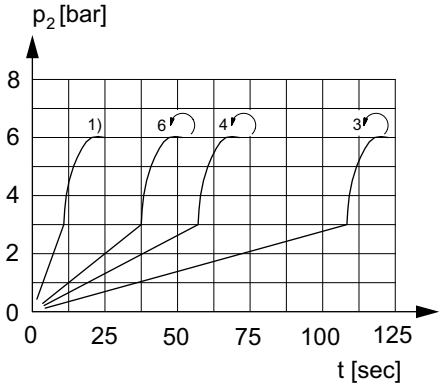

00107182

adjustable filling
1) Fully opened
p2 = secondary pressure
t = fill time

Filling valve, pneumatically operated, with electrical priority circuit, Series AS2-SSV

► G 1/4

Flow rate characteristic

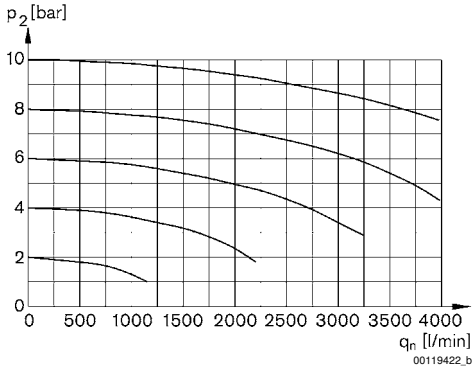

p2 = secondary pressure
qn = nominal flow

Start function

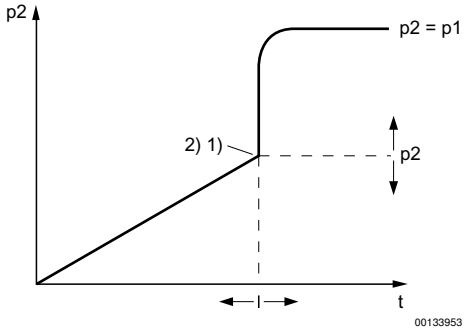

p1 = working pressure
p2 = output pressure
t = adjustable filling time
1) Switching point
2) adjustable filling time and change-over pressure

Preparation of compressed air → Maintenance units and components

Filling valve, pneumatically operated, with electrical priority circuit, Series AS2-SSV

► G 1/4

Dimensions

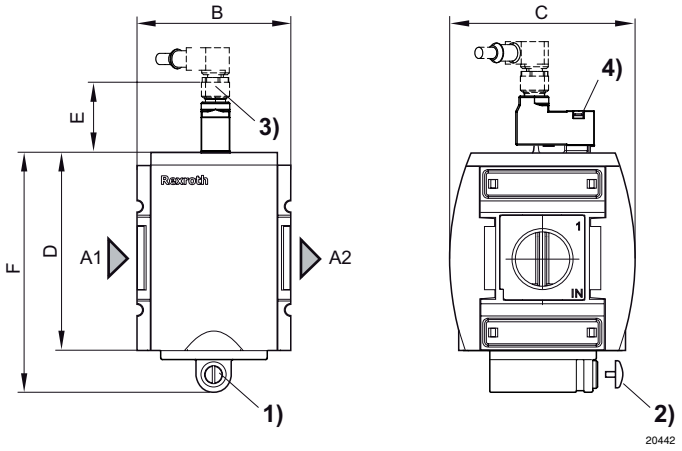

A1 = input
A2 = output
1) Adjustment screw for filling time
2) Adjustment screw lock
3) plug M12
4) Manual override

A1	A2	B	C	D	E	F							
G 1/4	G 1/4	52	59	65	39	79							

Pin assignment M12x1

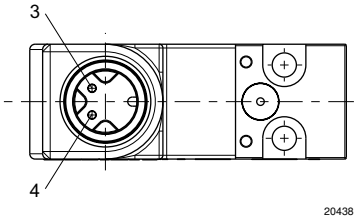

3: +/-
4: +/-