Sensor technologies → Distance measuring sensors

Sensors, Series SM6

► 6 mm groove ► with cable ► Plug, M8x1, 4-pin, with knurled screw ► with distance measuring sensor, measurement range 32 - 256 mm

Ambient temperature min./max.	-20°C / +70°C
Protection class	IP 67
Output signal	0 - 10 V DC, 4 - 20 mA
Quiescent current (without load)	< 25 mA
Current signal	4 - 20 mA
DC operating voltage min./max.	15 V - 30 V
Voltage signal	0 - 10 V DC
sampling interval	1 ms
Resolution max. measuring range	0,05 mm
Repetitive precision max. measuring range	0.1 mm
Linearity deviation	0,3 mm
Sampling speed	3 m/s
Display	LED
LED status display	Yellow
Vibration resistance	10 - 55 Hz, 1 mm
Shock resistance	30 g / 11 ms
Materials:	
Housing	Polyamide, fiber-glass reinforced
Cable sheath	Polyurethane

	Cable length	Measurement range Max.	Overall length Sensor A	Part No.
	[m]	[mm]	[mm]	
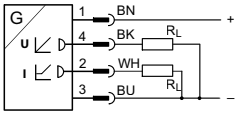	0.3	32	45	**R412010142**
		64	77	**R412010144**
		96	109	**R412010263**
		128	141	**R412010265**
		160	173	R412010410
		192	205	R412010412
		224	237	R412010414
		256	269	R412010416
interfaces: Plug; M8x1; 4-pin; with knurled screw short circuit resistant; Protected against polarity reversal; Overload protection				

Sensor technologies → Distance measuring sensors

Sensors, Series SM6

► 6 mm groove ► with cable ► Plug, M8x1, 4-pin, with knurled screw ► with distance measuring sensor, measurement range 32 - 256 mm

Dimensions

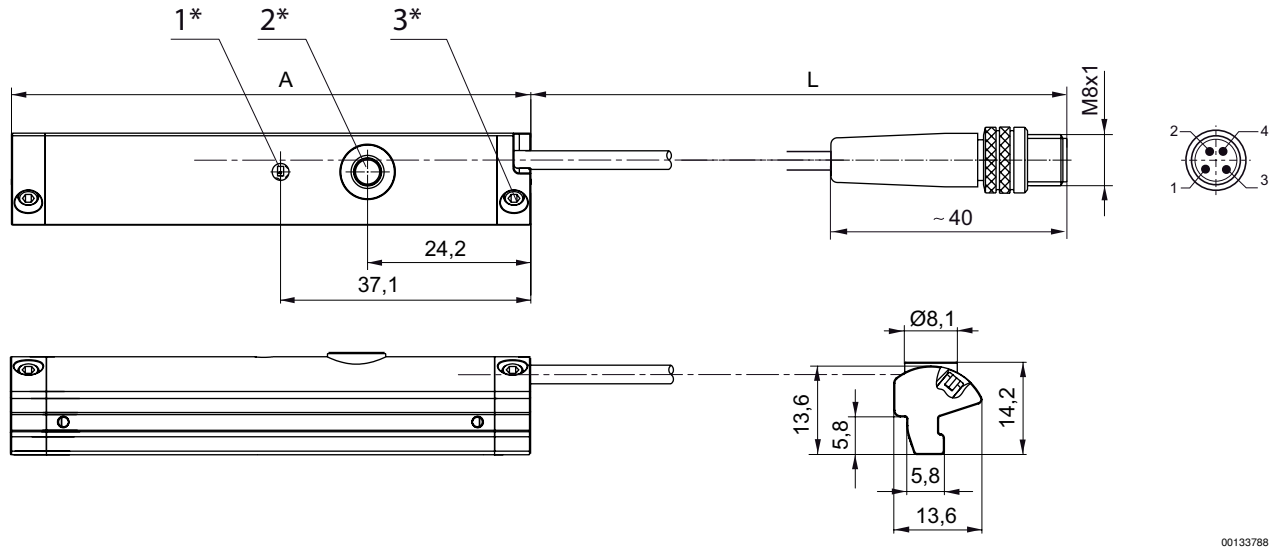

1* = LED 2* = teach button 3* = threaded pin M3x11
L = cable length
Pin assignment: 1 = (+), 2 = (OUT 1) 3 = (GND), 4 = (OUT 2), EN 60947-5-7
A = sensor length