Preparation of compressed air → Maintenance units and components

Distributor, Series AS3-DIC

► G 1/2 ► Distributor 4x ► Center infeed ► suitable for ATEX

00119389

ATEX	II 2G2D T4 X
Version	Center infeed, Can be assembled into blocks
Mounting orientation	Any
Working pressure min./max.	0 bar / 16 bar
Medium	Compressed air
Medium temperature min./max.	-10°C / +50°C
Ambient temperature min./max.	-10°C / +50°C
Materials:	
Housing	Polyamide
Front plate	Acrylonitrile butadiene styrene
Seals	Acrylonitrile Butadiene Rubber
Threaded bushing	Die cast zinc

Technical Remarks
■ Suitable for direct mounting of a PE1 and PM1 series pressure sensor (flange version)
■ Additional air supply possible at connections A4 and A5.

	Port	Qn		Weight	Part No.
		1►2	1►3		
		[l/min]		[kg]	
	G 1/2	10300	10300	0.32	**R412007249**
Nominal flow Qn at 10 bar and Δp = 1 bar					

Preparation of compressed air → Maintenance units and components

Distributor, Series AS3-DIC

► G 1/2 ► Distributor 4x ► Center infeed ► suitable for ATEX

Dimensions

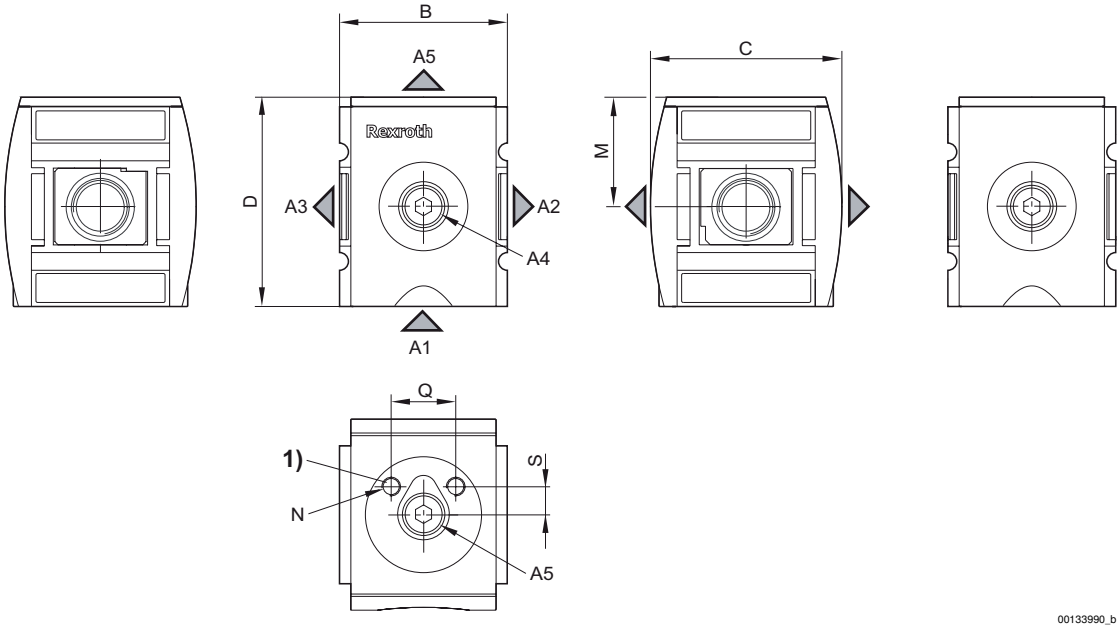

A1 = input
A2 = output
1) Mounting thread for pressure sensor

A1	A2	A3	A4	A5	B	C	D	M	N	Q	S		
G 1/2	G 1/2	G 1/2	G 3/8	G 1/4	63	74	80.5	42.5	M5	20	8		