Piston rod cylinders → Guide cylinders

Mini slide, Series ZSC

► Ø 6 - 25 mm ► double-acting ► with magnetic piston ► cushioning: elastic ► Easy–2–Combine-capable with connection kit ► with double piston ► with integrated ball rail guide

PSLID_003

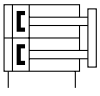

a28

Certificates	CE declaration of conformity, with reference to the EMC directive
Working pressure min./max.	1.5 bar / 7 bar
Ambient temperature min./max.	+0°C / +60°C
Medium temperature min./max.	+0°C / +60°C
Medium	Compressed air
Max. particle size	5 µm
Oil content of compressed air	0 mg/m³ - 5 mg/m³
Pressure for determining piston forces	6,3 bar
Materials:	
Housing	Aluminum, anodized
Piston rod	Stainless steel, chrome-plated
Front plate	Aluminum anodized
Seal	Nitrile rubber
Ball rail table	Aluminum, anodized
Guide rail	Stainless steel

Technical Remarks

- The pressure dew point must be at least 15 °C under ambient and medium temperature and may not exceed 3 °C.
- The oil content of air pressure must remain constant during the life cycle.
- Use only the approved oils from Bosch Rexroth, see chapter „Technical information“.

Piston Ø	**[mm]**	**2x6**	**2x10**	**2x16**	**2x20**	**2x25**
Port		**M5**	**M5**	**M5**	**G 1/8**	**G 1/8**
Retracting piston force, theoretical	[N]	26.5	73.7	217.4	332	519.1
Extracting piston force, theoretical	[N]	35.3	98.9	253.3	395.6	618
Extracting speed max.	[m/s]	0.5	0.5	0.5	0.5	0.5
Retracting speed max.	[m/s]	0.5	0.5	0.5	0.5	0.5
Cushioning energy	[Nm]	0.018	0.055	0.11	0.16	0.24
Max. moving mass, external	[kg]	0.6	1.3	2.6	4.3	5.7
Repetitive precision	[mm]	0,05 mm	0,05 mm	0,05 mm	0,05 mm	-

	Piston Ø	**2x6**	**2x10**	**2x16**	**2x20**	**2x25**
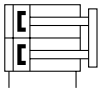	Stroke 10	**2650113000**	**2650113120**	**2650113280**	2650113440	**2650113600**
	20	**2650113010**	**2650113130**	2650113290	**2650113450**	2650113610
	30	**2650113020**	**2650113140**	2650113300	2650113460	2650113620
	40	**2650113030**	2650113150	**2650113310**	2650113470	2650113630
	50	**2650113040**	**2650113160**	**2650113320**	2650113480	2650113640
	60	**2650113050**	2650113170	2650113330	2650113490	2650113650
	70	**2650113060**	2650113180	2650113340	2650113500	2650113660
	80	-	2650113190	2650113350	2650113510	2650113670
	90	-	2650113200	2650113360	2650113520	2650113680
	100	-	**2650113210**	2650113370	2650113530	2650113690

Piston rod cylinders → Guide cylinders

Mini slide, Series ZSC

► Ø 6 - 25 mm ► double-acting ► with magnetic piston ► cushioning: elastic ► Easy–2–Combine-capable with connection kit ► with double piston ► with integrated ball rail guide

Weight [kg]	Piston Ø	2x6	2x10	2x16	2x20	2x25
	Stroke 10	0.105	0.199	0.366	0.644	1.067
	20	0.125	0.228	0.409	0.711	1.161
	30	0.145	0.257	0.452	0.778	1.255
	40	0.165	0.286	0.495	0.845	1.349
	50	0.185	0.315	0.538	0.912	1.443
	60	0.205	0.344	0.581	0.979	1.537
	70	0.225	0.373	0.624	1.046	1.631
	80	-	0.402	0.667	1.113	1.725
	90	-	0.431	0.71	1.18	1.819
	100	-	0.46	0.753	1.247	1.913

Static moment M [Nm], e.g. due to weight

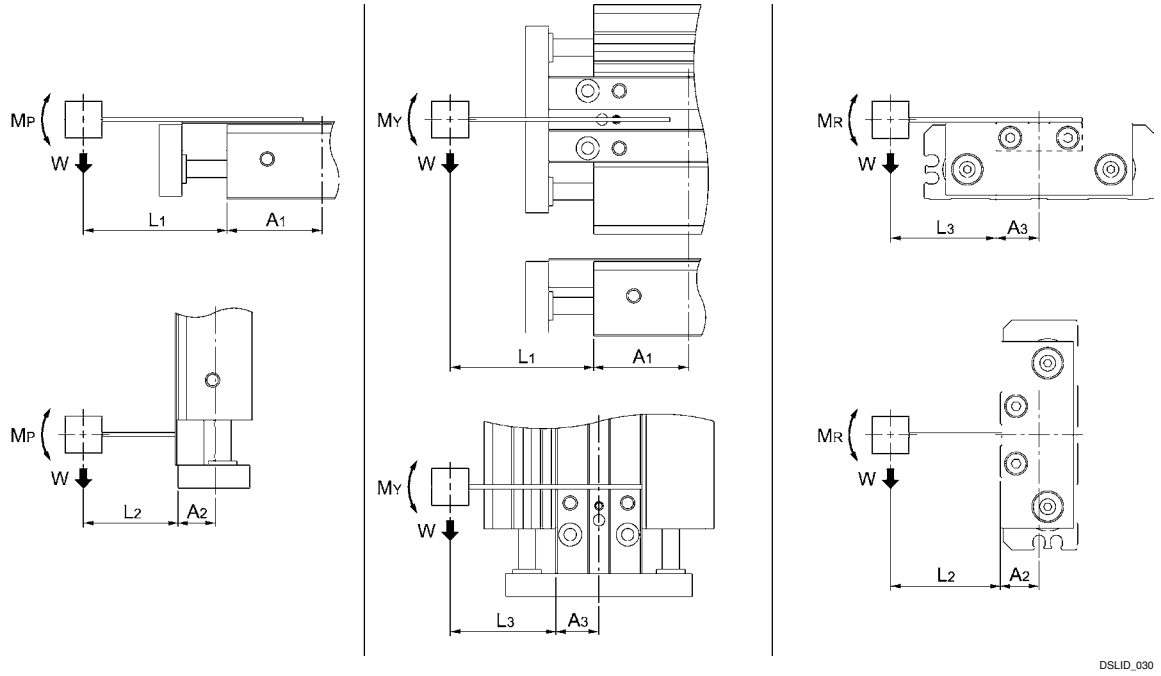

Piston rod cylinders → Guide cylinders

Mini slide, Series ZSC

► Ø 6 - 25 mm ► double-acting ► with magnetic piston ► cushioning: elastic ► Easy–2–Combine-capable with connection kit ► with double piston ► with integrated ball rail guide

Dynamic moment M [Nm], e.g. due to acceleration

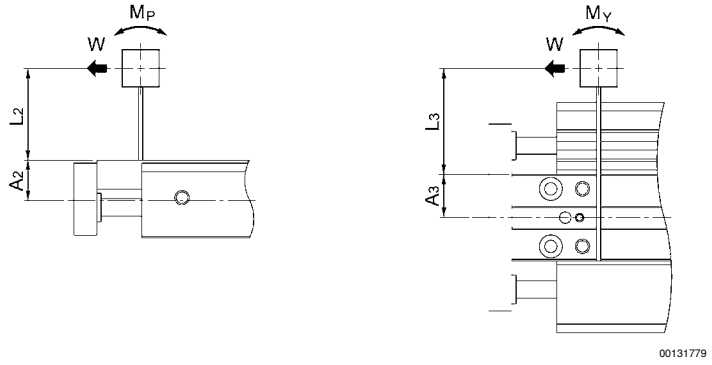

A1, A2, A3 = adjustment length [mm]
L1, L2, L3 = overhang length [mm]
Mp, My, Mr = torque M [Nm]
W = moving mass [kg]

Piston Ø	A1 [mm]	A2 [mm]	A3 [mm]	MP [Nm]	MR [Nm]	MY [Nm]							
6	20	11.5	11	1.59	0.67	0.53							
10	26	15	12.5	2.01	2.01	1.6							
16	33	18.5	15	6.17	6.17	4.94							
20	38	22.5	18	8.23	8.23	6.59							
25	47	27.5	22	10.29	10.29	8.23							

A1, A2, A3 = adjustment length [mm]
Mp, My, Mr = torque M [Nm]
max. permissible torque = static torque + dynamic torque

Piston rod cylinders → Guide cylinders

Mini slide, Series ZSC

► Ø 6 - 25 mm ► double-acting ► with magnetic piston ► cushioning: elastic ► Easy–2–Combine-capable with connection kit ► with double piston ► with integrated ball rail guide

ZSC 6

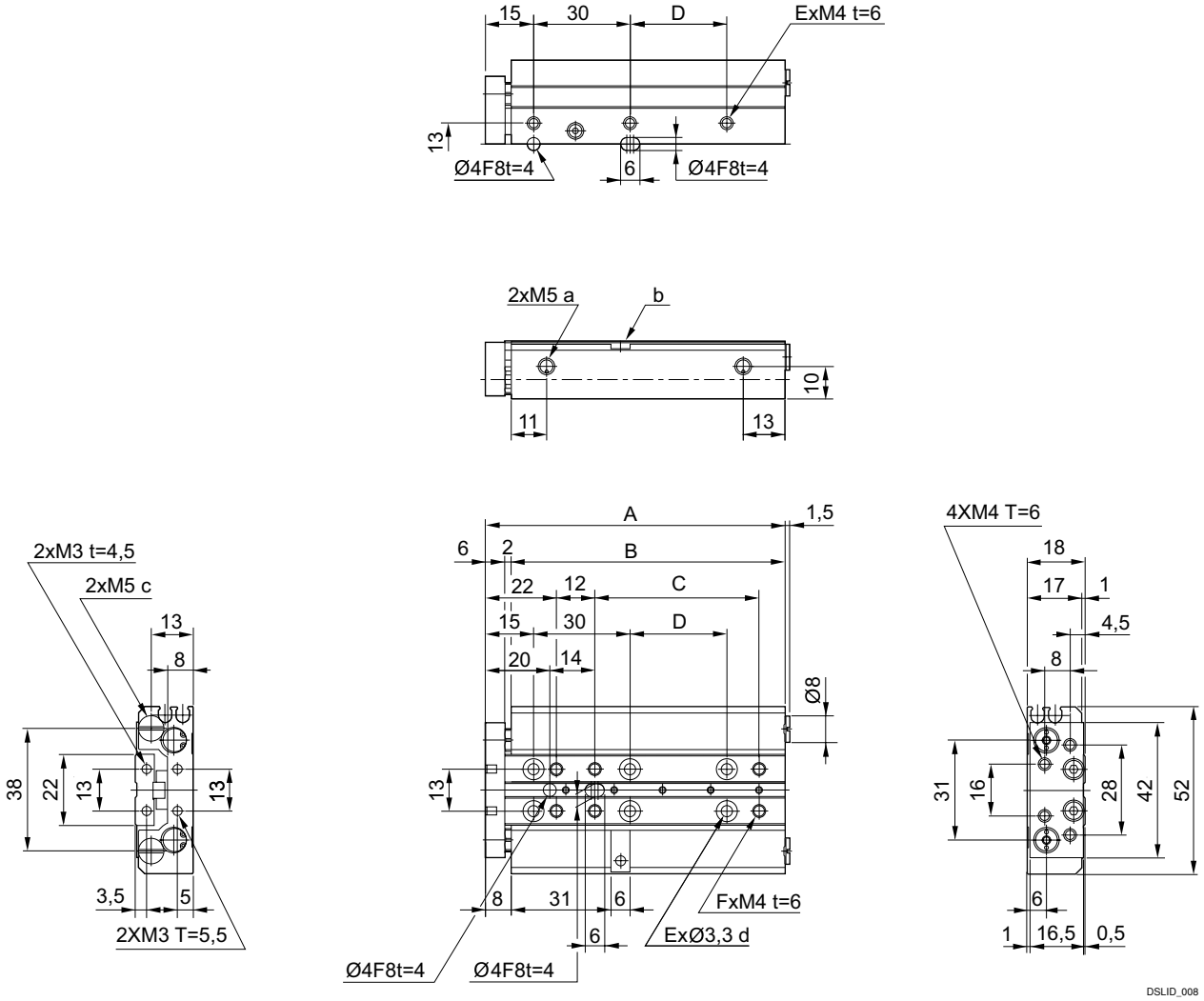

a) Port b) Stroke adjustment fitting (cannot be used for 10 mm c) Port closed d) M3 - thread is available from the top
t = depth

Piston Ø	S	A	B	C	D	E 1)	F 1)						
6	10	53	45	–	–	4	4						
6	20	63	55	21	–	4	6						
6	30	73	65	31	–	4	6						
6	40	83	75	41	–	4	6						
6	(50)*	93	85	51	30	6	6						
6	(60)*	103	95	61	30	6	6						
6	(70)*	113	105	71	30	6	6						

S = stroke
1) No. of holes
* on request

Piston rod cylinders → Guide cylinders

Mini slide, Series ZSC

► Ø 6 - 25 mm ► double-acting ► with magnetic piston ► cushioning: elastic ► Easy–2–Combine-capable with connection kit ► with double piston ► with integrated ball rail guide

ZSC 6, with elastomer stop

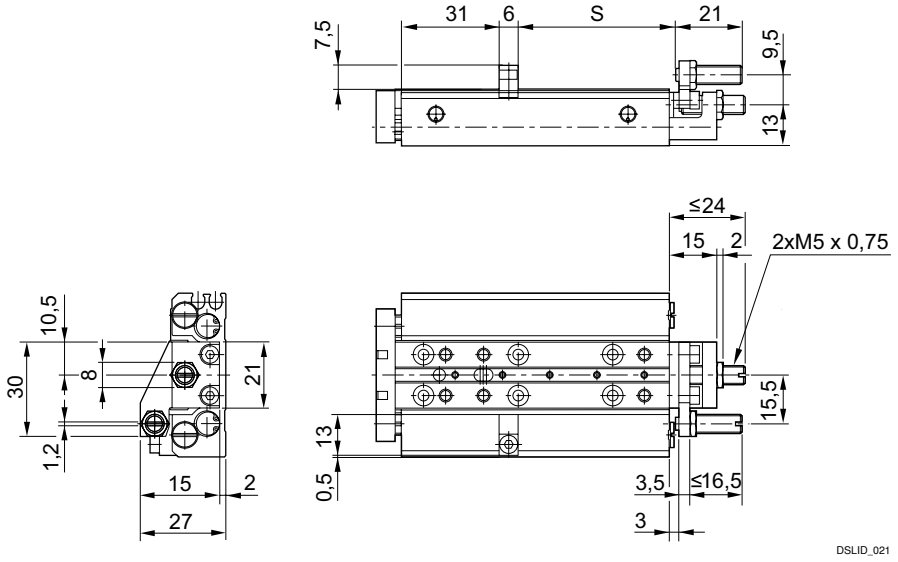

S = stroke

Piston rod cylinders → Guide cylinders

Mini slide, Series ZSC

► Ø 6 - 25 mm ► double-acting ► with magnetic piston ► cushioning: elastic ► Easy–2–Combine-capable with connection kit ► with double piston ► with integrated ball rail guide

ZSC 10

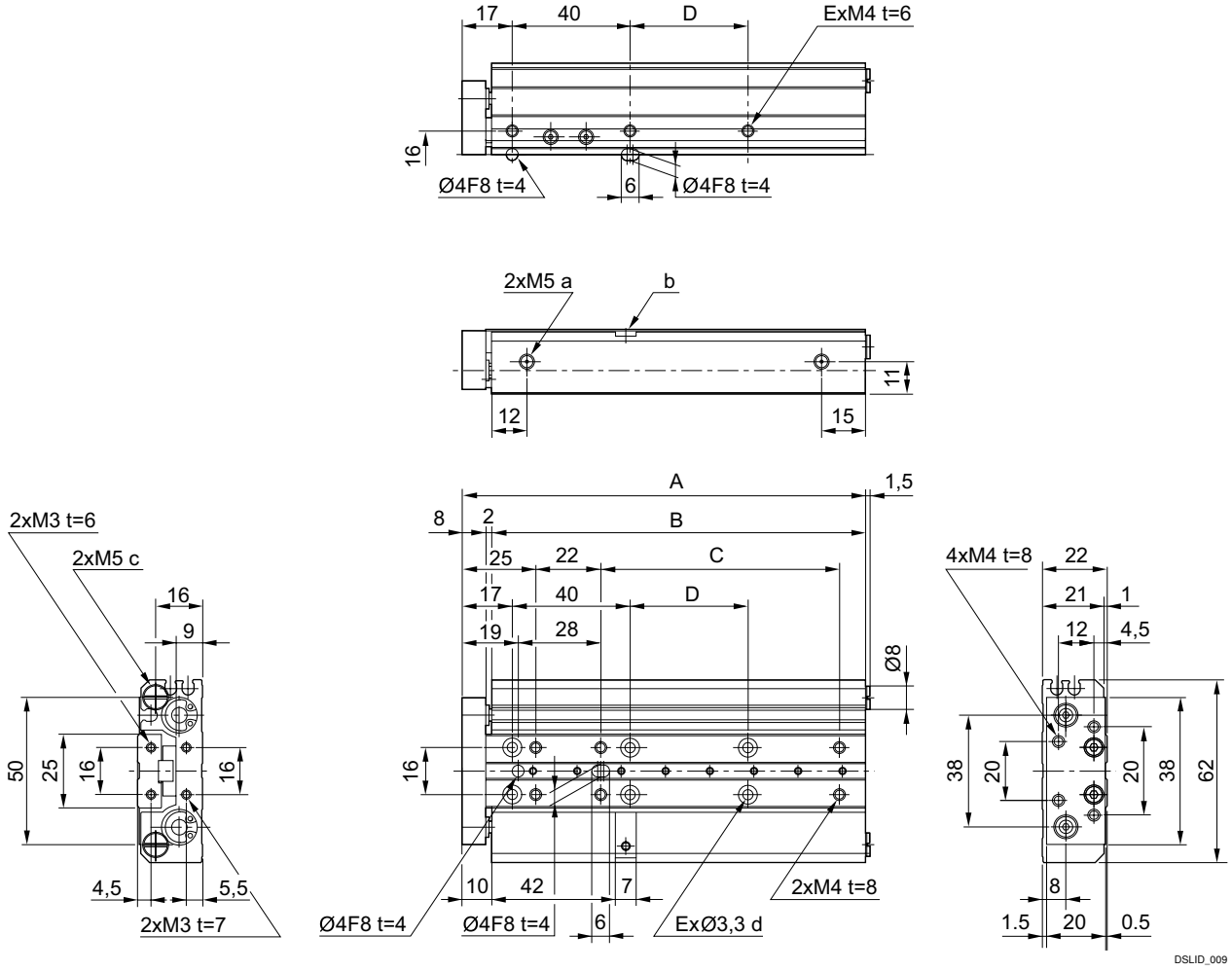

a) Port b) Stroke adjustment fitting (cannot be used for 10 mm c) Port closed d) M3 - thread is available from the top
t = depth

Piston Ø	S	A	B	C	D	E 1)	F 1)						
10	10	67	57	–	–	4	4						
10	20	77	67	21	–	4	6						
10	30	87	77	31	–	4	6						
10	40	97	87	41	–	4	6						
10	50	107	97	51	–	4	6						
10	(60)*	117	107	61	40	6	6						
10	(70)*	127	117	71	40	6	6						
10	(80)*	137	127	81	40	6	6						
10	(90)*	147	137	91	40	6	6						
10	(100)*	157	147	101	40	6	6						

S = stroke
1) No. of holes
* on request

Mini slide, Series ZSC

► Ø 6 - 25 mm ► double-acting ► with magnetic piston ► cushioning: elastic ► Easy–2–Combine-capable with connection kit ► with double piston ► with integrated ball rail guide

ZSC 10, with elastomer stop or shock absorber

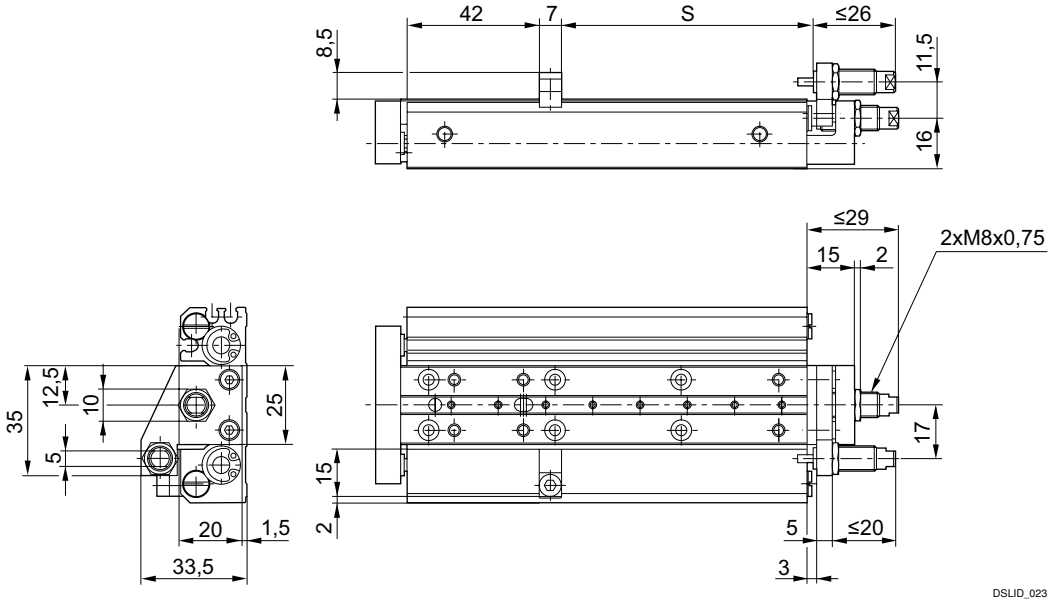

S = stroke

Piston rod cylinders → Guide cylinders

Mini slide, Series ZSC

► Ø 6 - 25 mm ► double-acting ► with magnetic piston ► cushioning: elastic ► Easy–2–Combine-capable with connection kit ► with double piston ► with integrated ball rail guide

ZSC 16

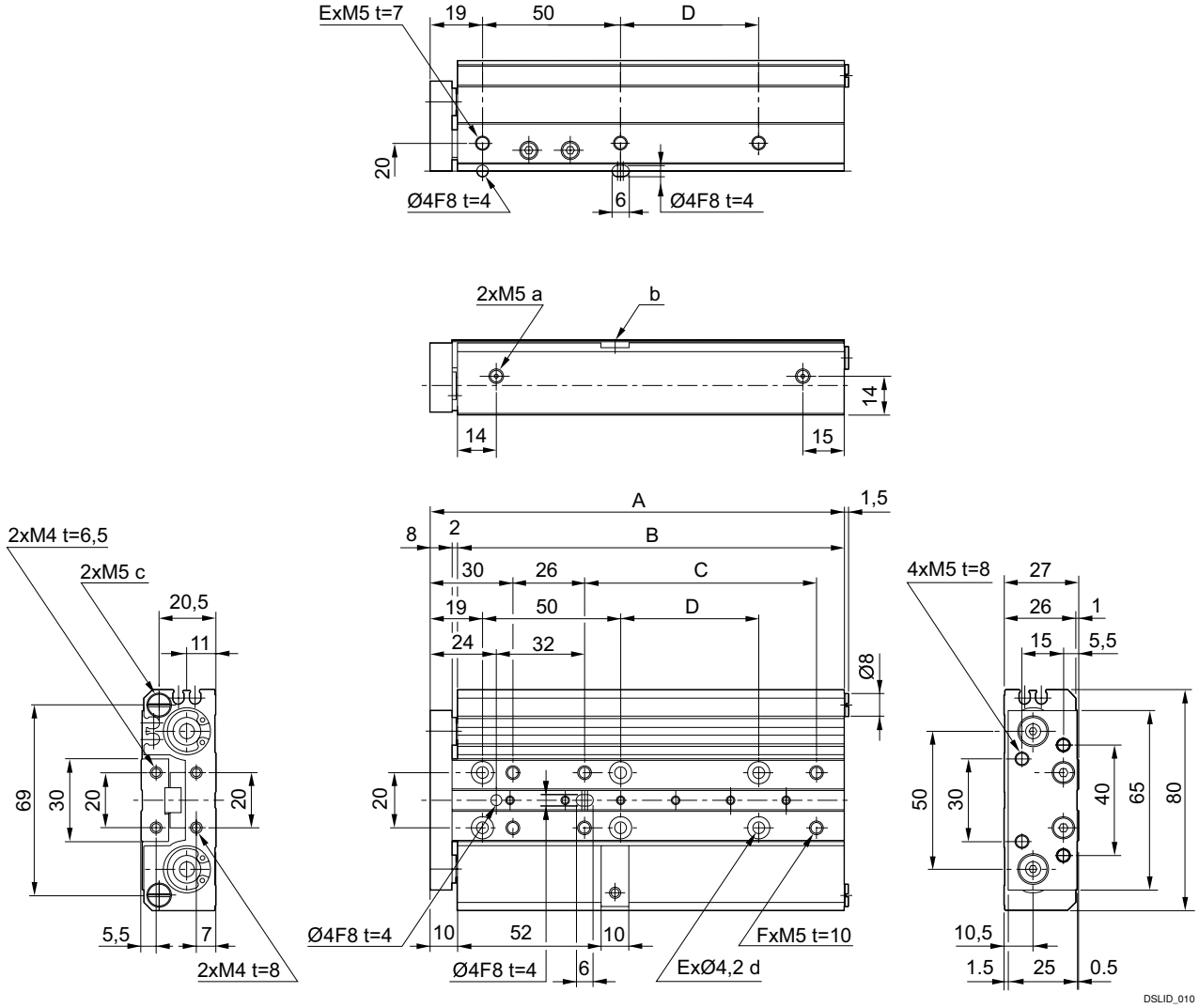

a) Port b) Stroke adjustment fitting (cannot be used for 10 mm c) Port with plug d) M4 - thread is available from the top
t = depth

Piston Ø	S	A	B	C	D	E 1)	F 1)						
16	10	80	70	–	–	4	4						
16	20	90	80	24	–	4	6						
16	30	100	90	34	–	4	6						
16	40	110	100	44	–	4	6						
16	50	120	110	54	–	4	6						
16	(60)*	130	120	64	–	4	6						
16	(70)*	140	130	74	50	6	6						
16	80	150	140	84	50	6	6						
16	(90)*	160	150	94	50	6	6						
16	(100)*	170	160	104	50	6	6						

S = stroke
1) No. of holes
* on request

Piston rod cylinders → Guide cylinders

Mini slide, Series ZSC

► Ø 6 - 25 mm ► double-acting ► with magnetic piston ► cushioning: elastic ► Easy–2–Combine-capable with connection kit ► with double piston ► with integrated ball rail guide

ZSC 16, with elastomer stop or shock absorber

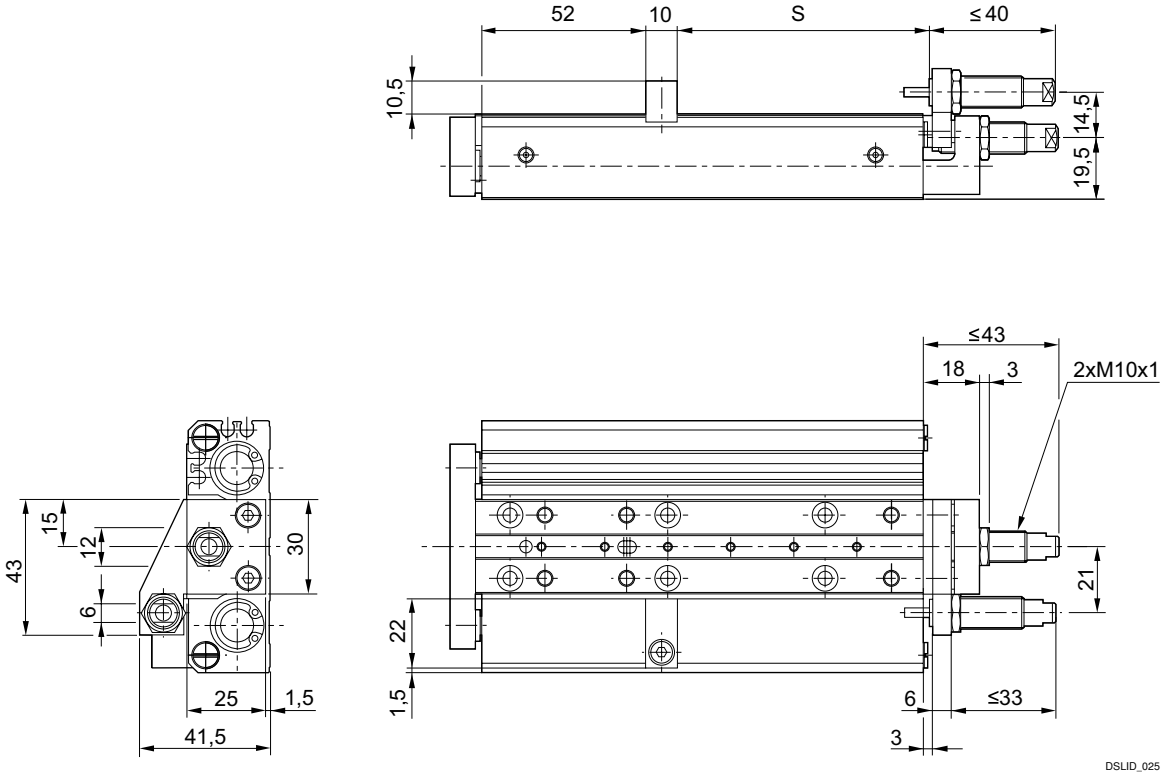

S = stroke

Piston rod cylinders → Guide cylinders

Mini slide, Series ZSC

► Ø 6 - 25 mm ► double-acting ► with magnetic piston ► cushioning: elastic ► Easy–2–Combine-capable with connection kit ► with double piston ► with integrated ball rail guide

ZSC 20

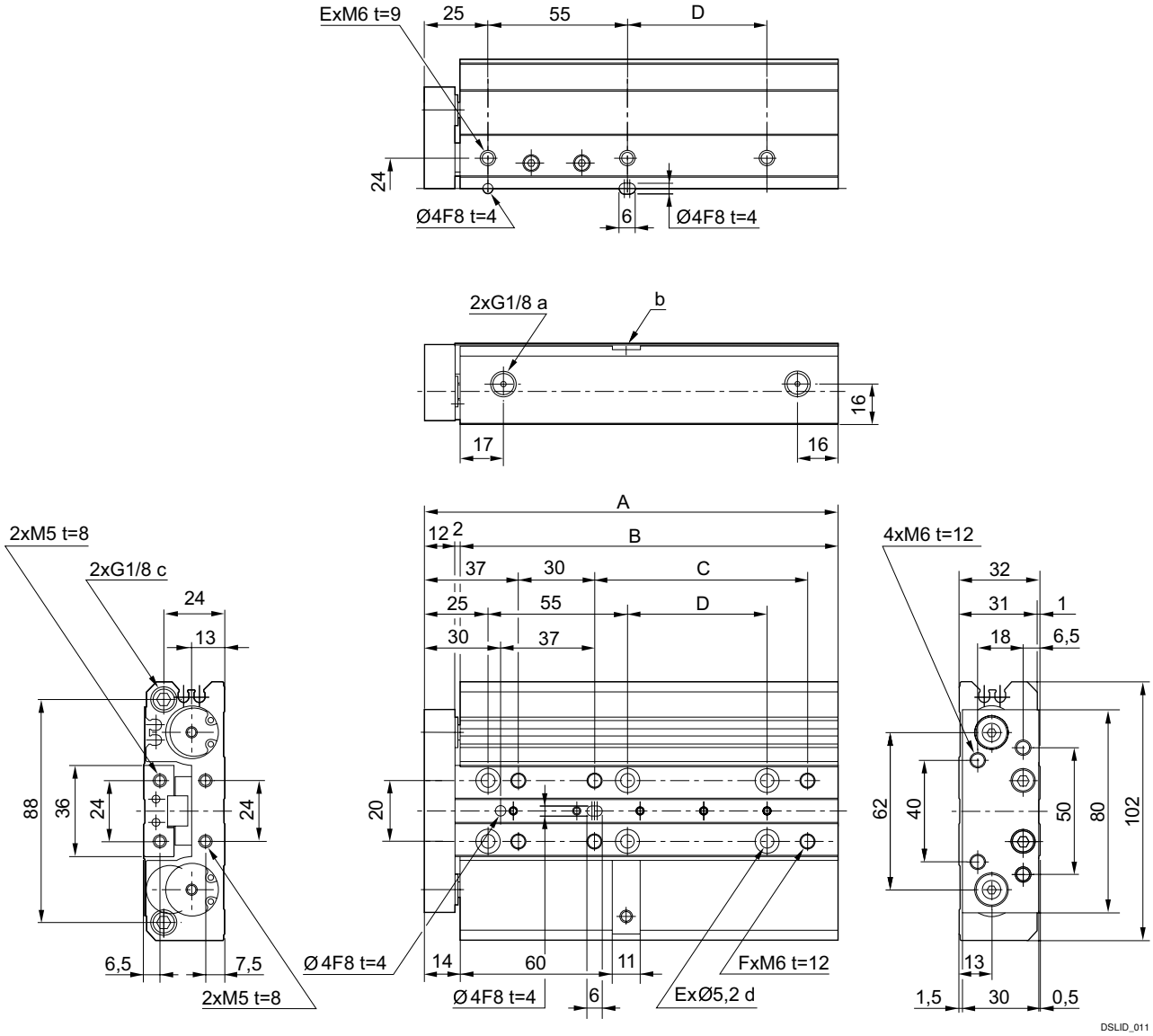

a) Port b) Stroke adjustment fitting (cannot be used for 10 mm c) Port with plug d) M5 - thread is available from the top
t = depth

Piston Ø	S	A	B	C	D	E 1)	F 1)						
20	10	93	79	–	–	4	4						
20	20	103	89	24	–	4	6						
20	30	113	99	34	–	4	6						
20	40	123	109	44	–	4	6						
20	50	133	119	54	–	4	6						
20	(60)*	143	129	64	–	4	6						
20	(70)*	153	139	74	–	4	6						

S = stroke
1) No. of holes
* on request

Piston rod cylinders → Guide cylinders

Mini slide, Series ZSC

► Ø 6 - 25 mm ► double-acting ► with magnetic piston ► cushioning: elastic ► Easy–2–Combine-capable with connection kit ► with double piston ► with integrated ball rail guide

Piston Ø	S	A	B	C	D	E 1)	F 1)						
20	80	163	149	84	55	6	6						
20	(90)*	173	159	94	55	6	6						
20	(100)*	183	169	104	55	6	6						

S = stroke
1) No. of holes
* on request

ZSC 20, with elastomer stop or shock absorber

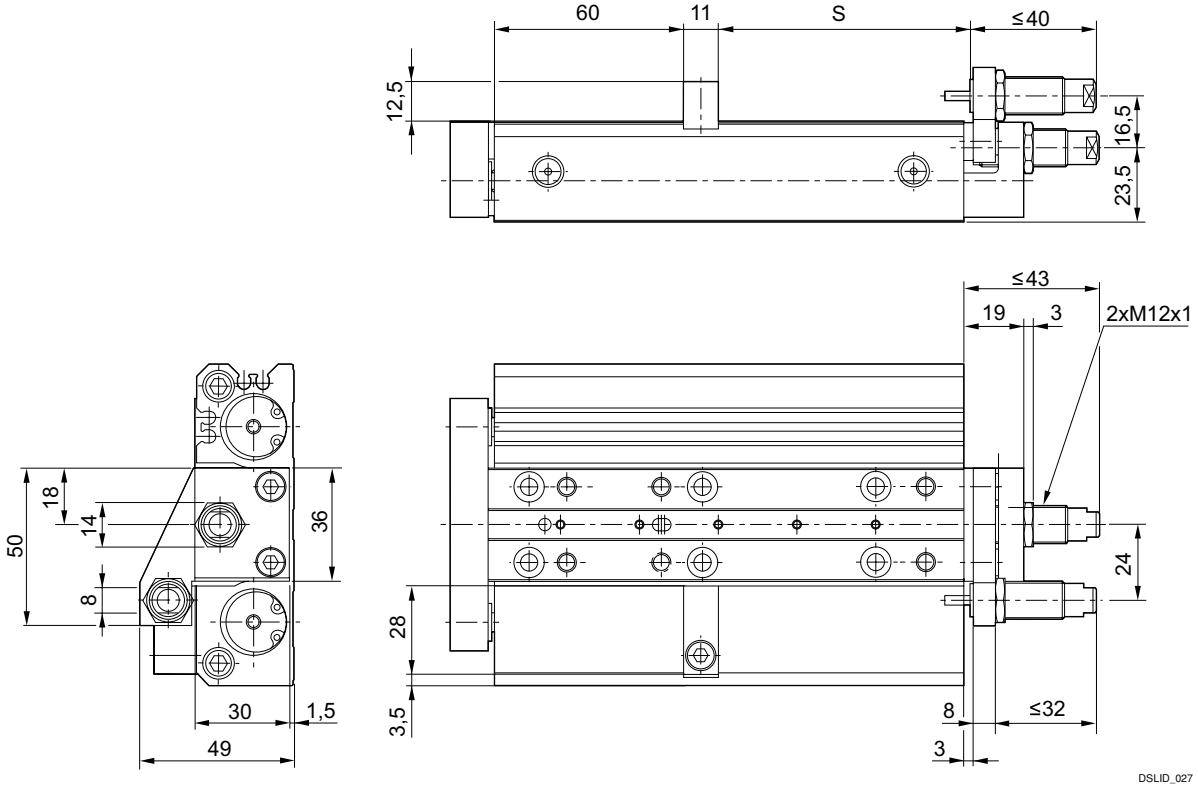

S = stroke

Piston rod cylinders → Guide cylinders

Mini slide, Series ZSC

► Ø 6 - 25 mm ► double-acting ► with magnetic piston ► cushioning: elastic ► Easy–2–Combine-capable with connection kit ► with double piston ► with integrated ball rail guide

ZSC 25

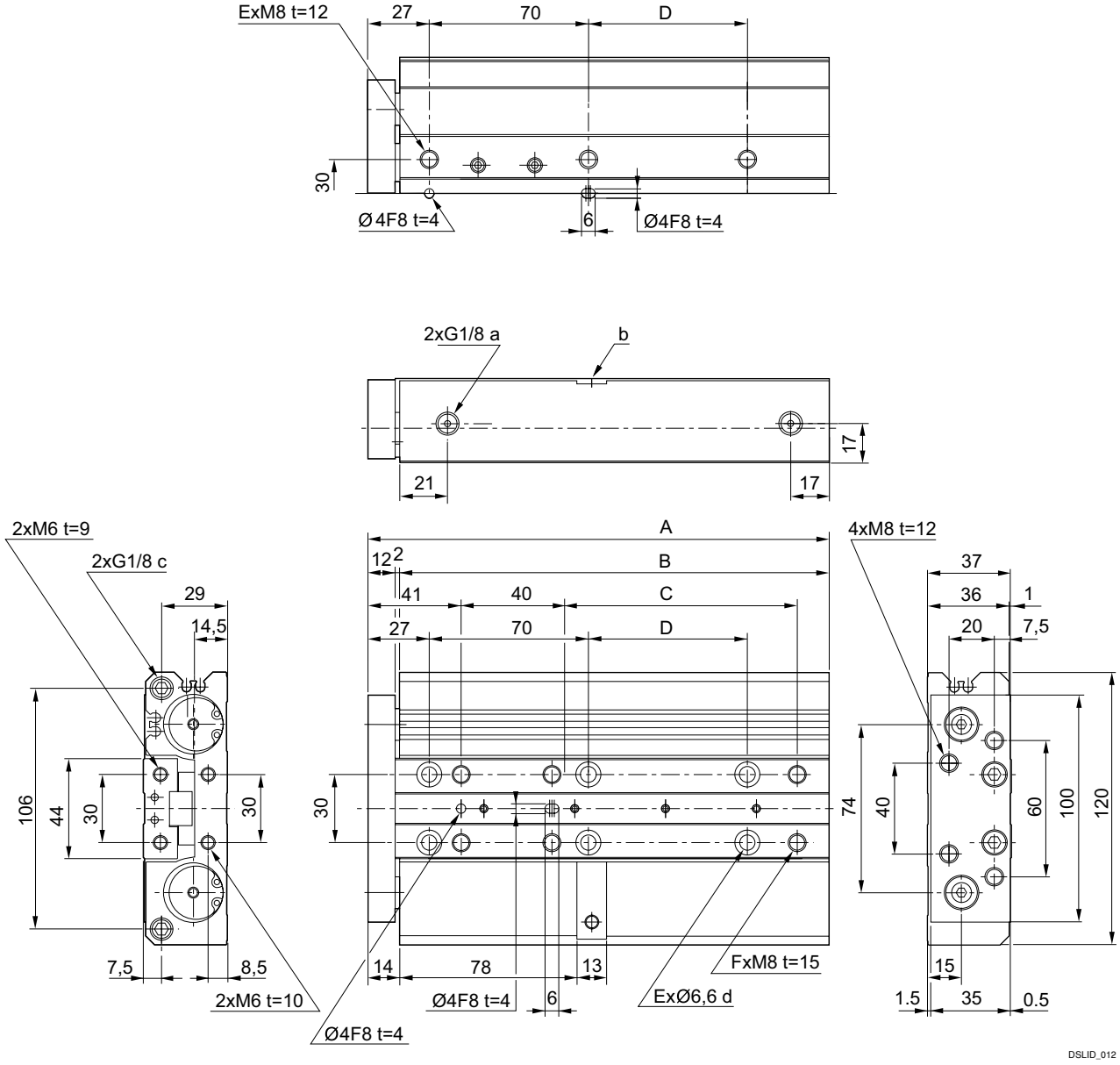

a) Port b) Stroke adjustment fitting (cannot be used for 10 mm c) Port with plug d) M6 - thread is available from the top
t = depth

Piston Ø	S	A	B	C	D	E 1)	F 1)						
25	10	113	99	–	–	4	4						
25	20	123	109	28	–	4	6						
25	30	133	119	38	–	4	6						
25	40	143	129	48	–	4	6						
25	50	153	139	58	–	4	6						

S = stroke
1) No. of holes
* on request

Piston rod cylinders → Guide cylinders

Mini slide, Series ZSC

► Ø 6 - 25 mm ► double-acting ► with magnetic piston ► cushioning: elastic ► Easy–2–Combine-capable with connection kit ► with double piston ► with integrated ball rail guide

Piston Ø	S	A	B	C	D	E 1)	F 1)						
25	(60)*	163	149	68	–	4	6						
25	(70)*	173	159	78	–	4	6						
25	80	183	169	88	–	4	6						
25	(90)*	193	179	98	70	6	6						
25	(100)*	203	189	108	70	6	6						

S = stroke
1) No. of holes
* on request

ZSC 25, with elastomer stop or shock absorber

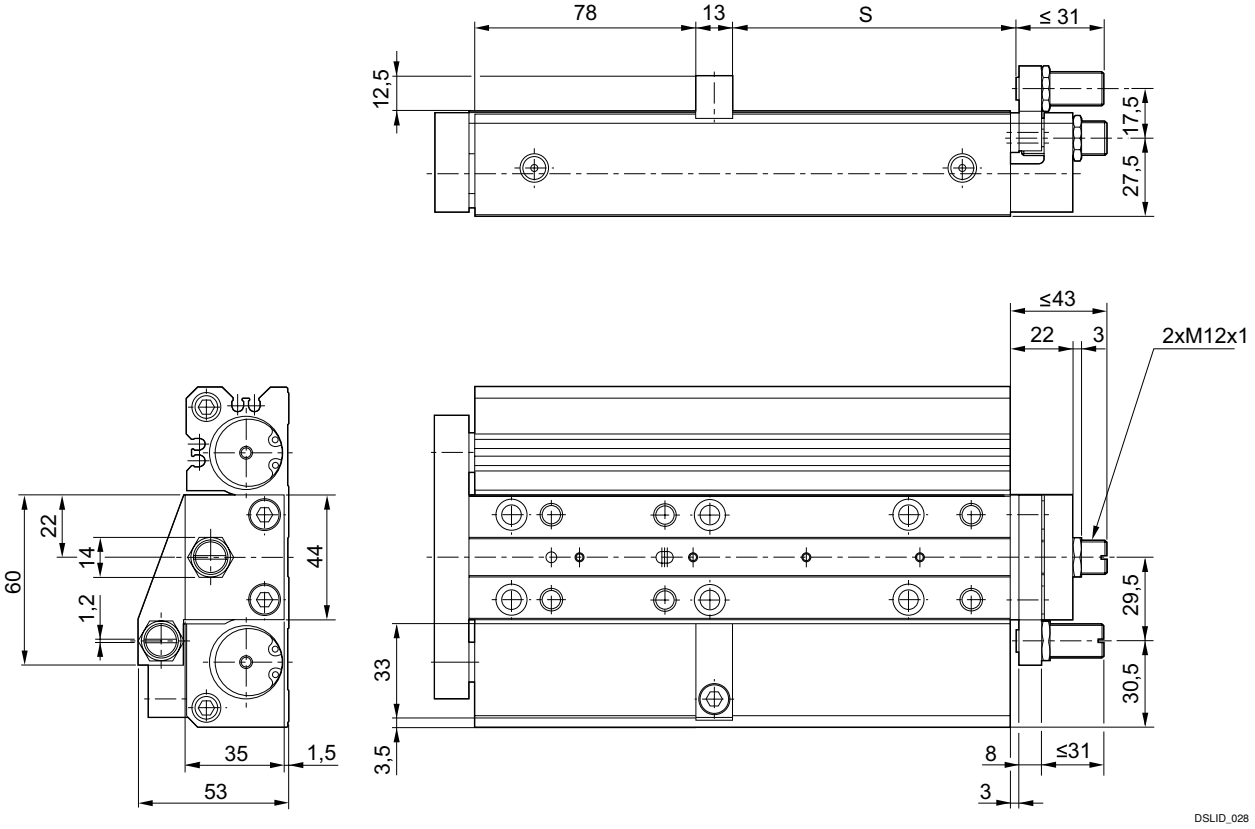

S = stroke