Directional valves → Supplementary products

3/2-way valve, Series 579

► Qn = 600 - 850 l/min ► pipe connection ► compressed air connection output: Ø 8x1 ► Can be assembled into blocks

P579_060

Version	Poppet valve
Sealing principle	soft sealing
Blocking principle	Plate principle
Working pressure min./max.	0.5 bar / 8 bar
Control pressure min./max.	2 bar / --
Ambient temperature min./max.	-15°C / +60°C
Medium temperature min./max.	-15°C / +60°C
Medium	Compressed air
Max. particle size	5 µm
Oil content of compressed air	0 mg/m³ - 1 mg/m³
Materials:	
Housing	Polyamide
Seals	Acrylonitrile Butadiene Rubber

Technical Remarks

- The pressure dew point must be at least 15 °C under ambient and medium temperature and may not exceed 3 °C.
- The oil content of air pressure must remain constant during the life cycle.
- Use only the approved oils from Bosch Rexroth, see chapter „Technical information“.

			Compressed air connection		Flow rate value			
	Blocking principle		**Output**	**Pilot connection**	**Qn**	**Weight**	**Note**	**Part No.**
					[l/min]	**[kg]**		
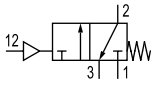	Inlet valve Stacking valve End valve	NC	Ø 8x1	Ø 4	850	0.06 0.056 0.062	1)	5790600000 **5791600000** **5792600000**
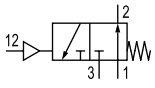	Inlet valve Stacking valve End valve	NO	Ø 8x1	Ø 4	600	0.06 0.057 0.058	1)	5790600010 5791600010 5792600010

1) Control pressure in port 12 must be greater than pressure in port 1
Nominal flow Qn at 6 bar and Δp = 1 bar

Directional valves → Supplementary products

3/2-way valve, Series 579

► Qn = 600 - 850 l/min ► pipe connection ► compressed air connection output: Ø 8x1 ► Can be assembled into blocks

Dimensions

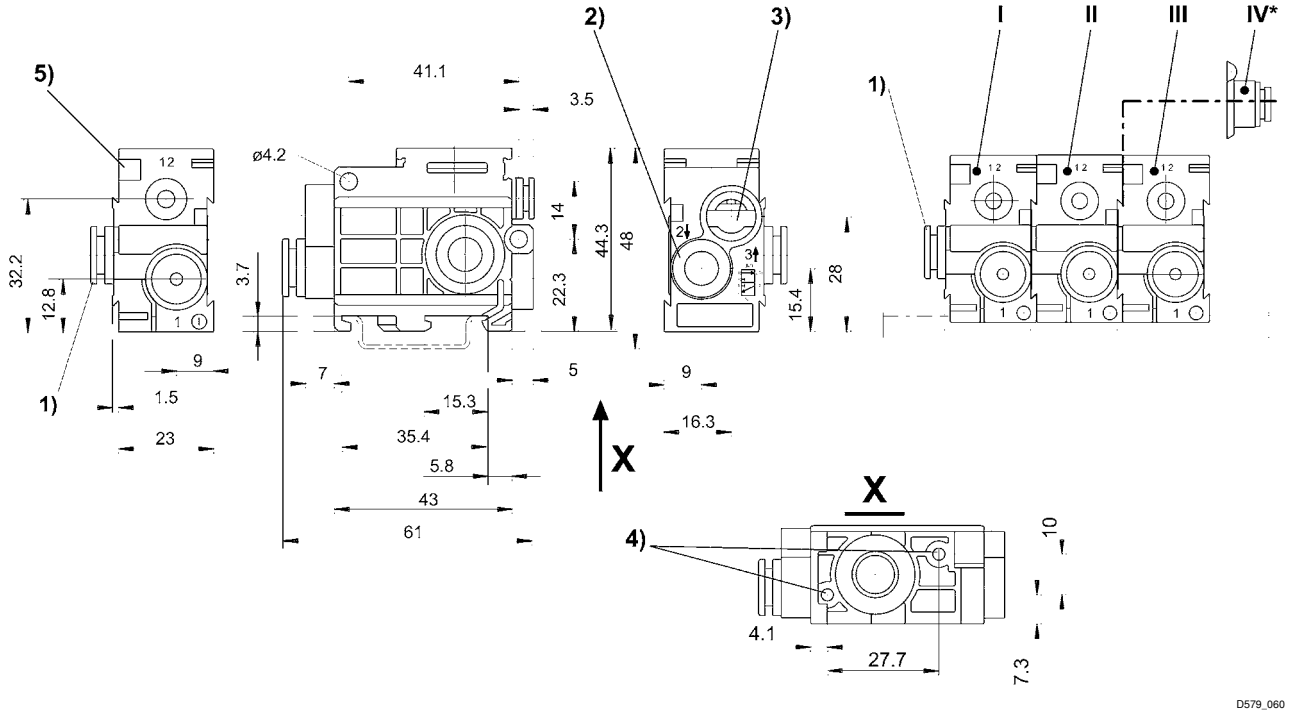

1) port 1
2) port 2
3) port 3 exhaust must not be throttled
4) pocket hole 6 mm deep for 3.5 self-tapping screw
5) mounting space for name plate

* Air conn. module (item IV) mounted onto stacking valve (item II) permits additional air supply from right hand side. End valve (item III) not required.
Inlet valve (pos. I]