Directional valves → Pneumatically operated

3/2-way valve, Series 589

► Qn = 520 - 750 l/min ► pipe connection ► compressed air connection output: Ø6x1 - Ø 8x1 ► single valve

P579_440

Version	Poppet valve
Sealing principle	soft sealing
Working pressure min./max.	0.5 bar / 8 bar
Control pressure min./max.	3 bar / --
Ambient temperature min./max.	-15°C / +60°C
Medium temperature min./max.	-15°C / +60°C
Medium	Compressed air
Max. particle size	5 µm
Oil content of compressed air	0 mg/m³ - 1 mg/m³
Materials:	
Housing	Polyamide
Seals	Acrylonitrile Butadiene Rubber

Technical Remarks

- The pressure dew point must be at least 15 °C under ambient and medium temperature and may not exceed 3 °C.
- The oil content of air pressure must remain constant during the life cycle.
- Use only the approved oils from Bosch Rexroth, see chapter „Technical information“.
- At an ambient temperature of 40 °C the max. working pressure is 10 bar.
- vacuum operation possible: connection 1 at least 3 bar; connection 3 at least -0.95 bar

		Compressed air connection				Flow rate value			
		Input	Output	Exhaust	Pilot connection	Qn	Weight	Note	Part No.
						[l/min]	[kg]		
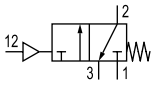	NC	Ø6x1	Ø6x1	Ø 8x1	Ø 4	520	0.066	1)	**5894400000**
		Ø 8x1	Ø 8x1			750	0.064		**5894600000**
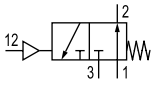	NO	Ø6x1	Ø6x1	Ø 8x1	Ø 4	520	0.067	1)	5894400010
		Ø 8x1	Ø 8x1			750	0.128		5894600010

1) Control pressure in port 12 must be greater than pressure in port 1
Nominal flow Qn at 6 bar and Δp = 1 bar

Directional valves → Pneumatically operated

3/2-way valve, Series 589

► Qn = 520 - 750 l/min ► pipe connection ► compressed air connection output: Ø6x1 - Ø 8x1 ► single valve

Dimensions

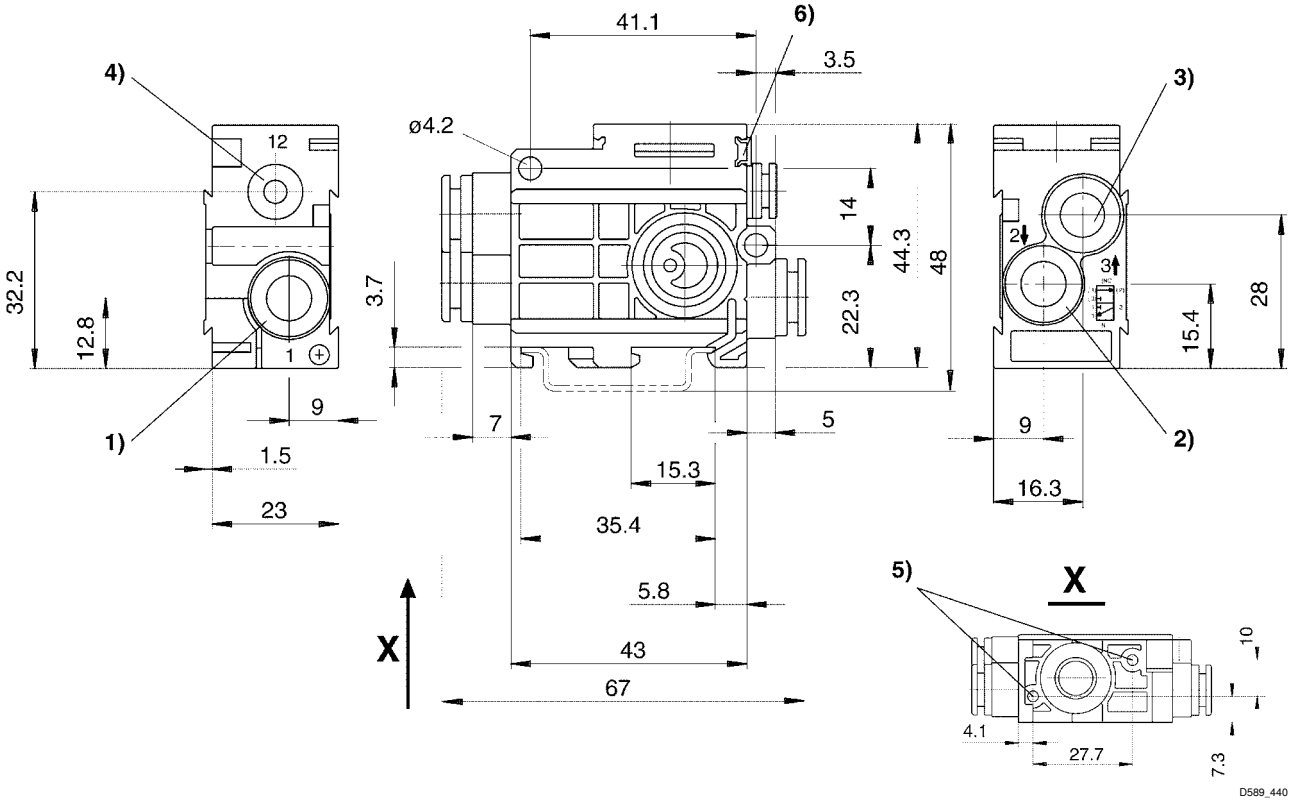

1) port 1
2) port 2
3) port 3
4) port 12
5) pocket hole 6 mm deep for 3.5 self-tapping screw
6) mounting space for name plate