Directional valves → Pneumatically operated

5/2-way valve, Series TC08

► Qn = 800 l/min ► pipe connection ► compressed air connection output: G 1/8

00120253

Version	Spool valve, zero overlap
Pilot	external
Sealing principle	soft sealing
Mounting on manifold strip	P-strip
Working pressure min./max.	See table below
Control pressure min./max.	See table below
Ambient temperature min./max.	-10°C / +50°C
Medium temperature min./max.	-10°C / +50°C
Medium	Compressed air
Max. particle size	5 µm
Oil content of compressed air	0 mg/m³ - 5 mg/m³
mounting screw tightening torque	2 Nm
Materials:	
Housing	Polyamide, fiber-glass reinforced
Seals	Acrylonitrile Butadiene Rubber
Front plate	Polyamide, fiber-glass reinforced
Threaded bushing	Brass, chrome-plated; Die cast zinc, nickel-plated

Technical Remarks

- The pressure dew point must be at least 15 °C under ambient and medium temperature and may not exceed 3 °C.
- The oil content of air pressure must remain constant during the life cycle.
- Use only the approved oils from Bosch Rexroth, see chapter „Technical information“.

	Compressed air connection				Flow conductance		Flow rate value				
	Input	Output	Ex-haust	Pilot con-nection	b	C	Qn	Working pressure min./max.	Control pressure min./max.		Part No.
						[l/(s*bar)]	[l/min]	[bar]	[bar]	[kg]	
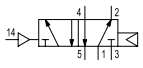	G 1/8	G 1/8	G 1/8	M5	0.36	3.5	800	2.5 / 10	2.5 / 10	0.097	**0820260001**
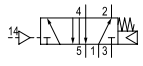	G 1/8	G 1/8	G 1/8	M5	0.36	3.5	800	3 / 10	3 / 10	0.097	**0820260002**
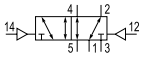	G 1/8	G 1/8	G 1/8	M5	0.36	3.5	800	-0.9 / 10	2 / 10	0.097	**0820260003**
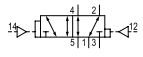	G 1/8	G 1/8	G 1/8	M5	0.36	3.5	800	-0.9 / 10	2.5 / 10	0.097	**0820260004**

Nominal flow Qn at 6 bar and Δp = 1 bar
Caution: The minimum control pressure depends on the working pressure (see “Control pressure” diagram below).

Directional valves → Pneumatically operated

5/2-way valve, Series TC08

► Qn = 800 l/min ► pipe connection ► compressed air connection output: G 1/8

Control pressure

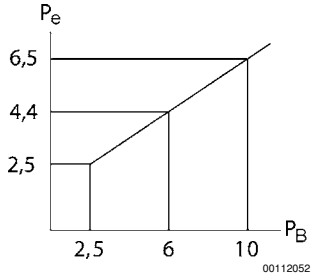

Pe = External control pressure, min.
P_B = Working pressure
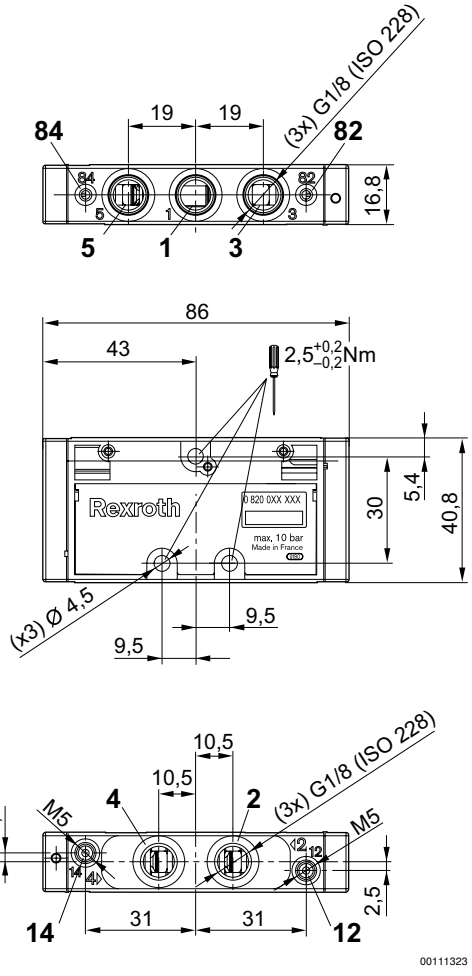
Dimensions