Pressure regulators → Supplementary products

Fine setting valve

► Qn = 900 l/min ► Actuating element: Hand lever ► internal thread, internal thread ► Poppet valve

3610-721

Ambient temperature min./max.	-25°C / +70°C
Medium temperature min./max.	-25°C / +70°C
Medium	Compressed air
Qn	900 l/min
Hysteresis	< 0,15 bar
Materials:	
Housing	Die cast zinc
Seals	Acrylonitrile Butadiene Rubber

	Compressed air connection		Working pressure min./max.	Adjustment range min./max.	Weight	Part No.
	Input	Output				
			[bar]	[bar]	[kg]	
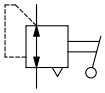	G 1/4	G 1/4	0.1 / 10	0.1 / 4.1	1.2	**3610628300**
			0.1 / 10	0.1 / 4.6		3610628400
			0.1 / 10	0.1 / 5.1		**3610628500**
			0.1 / 10	0.1 / 7.1		**3610628600**
			0.1 / 12	0.1 / 10.1		**3610628700**
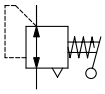	G 1/4	G 1/4	0.1 / 10	0.1 / 4.1	1.2	3610628330
				0.1 / 7.1		**3610628630**

Pressure regulators → Supplementary products

Fine setting valve

► Qn = 900 l/min ► Actuating element: Hand lever ► internal thread, internal thread ► Poppet valve

Dimensions

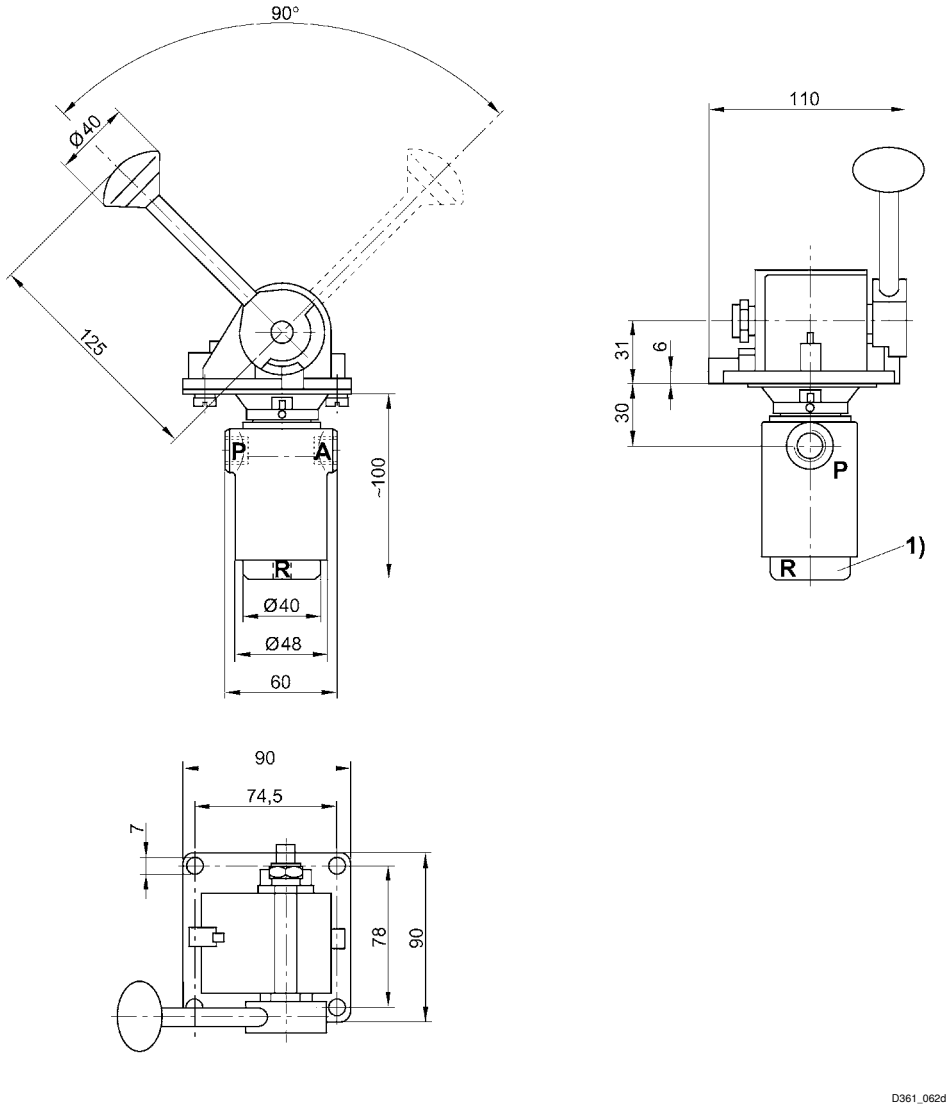

1) Screw cap
A = connection output
P = connection input
R = Port exhaust

Pressure regulators → Supplementary products

Fine setting valve

► Qn = 900 l/min ► Actuating element: Hand lever ► internal thread, internal thread ► Poppet valve

Pressure characteristics curve

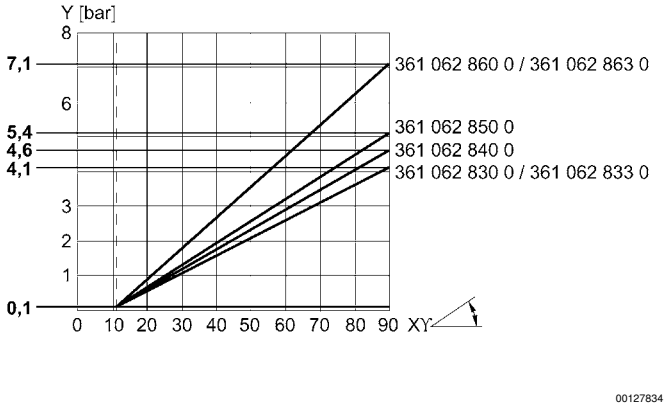

x = lever path
The characteristic curve can be moved parallel to the illustrated characteristic curve (in the y direction) using the screw cap.

Nominal flow

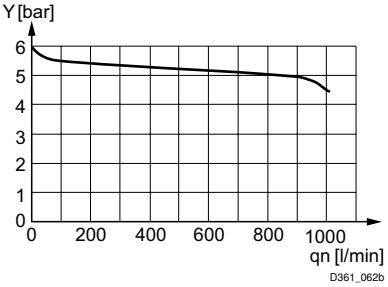

input pressure: 8 bar, supply pressure: 6 bar
y: pressure in line ‘’A’’ [bar]

Cut-out in the mounting plate

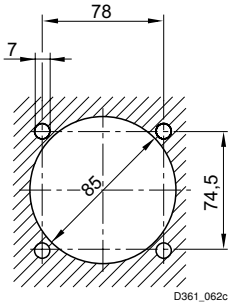

Mounting plate max. 10 mm thick