Valve systems → Supplementary products

Single subbase

► standard: ISO 5599-2 ► Frame size: ISO 3 ► compressed air connection output: G 3/4 - 3/4 NPTF ► Reversed pressure supply permissible

P261_030

Version	Single plug-in wiring
Ambient temperature min./max.	-10°C / +50°C
Medium temperature min./max.	-14°C / +50°C
Medium	Compressed air
Working pressure min./max.	-0.95 bar / 10 bar
Number of valve positions	1
Surface	anodized
Tightening torque for mounting screws	5 Nm
Direction of pneumatic port (1)	On the side
Direction of pneumatic port (2,4)	On the side
Direction of pneumatic port (12)	On the side
Direction of pneumatic port (14)	On the side
Exhaust (3,5)	unrestricted exhaust
	Ports separated
Compressed air connection	according to ISO 5599
Materials:	
Housing	Die-cast aluminum, painted gray
Subbase	Die-cast aluminum
Seals	Aluminum, anodized

Technical Remarks
■ The pressure dew point must be at least 15 °C under ambient and medium temperature and may not exceed 3 °C.
■ The oil content of air pressure must remain constant during the life cycle.
■ Use only the approved oils from Bosch Rexroth, see chapter „Technical information“.

Frame size	electrical connections	Compressed air connection					Part No.
		Input	Output	Exhaust	Pilot control exhaust	Pilot connection	
		[1]	[2 / 4]	[3 / 5]	[12]	[14]	
ISO 3	without wire end ferrule, tin-plated	G 3/4	G 3/4	G 3/4	G 1/8	G 1/8	R432025931
	without wire end ferrule, tin-plated	3/4 NPTF	3/4 NPTF	3/4 NPTF	1/8 NPTF	1/8 NPTF	R432025933
	Plug, M12, 5-pin	G 3/4	G 3/4	G 3/4	G 1/8	G 1/8	R432025935
	Plug, M12, 5-pin	3/4 NPTF	3/4 NPTF	3/4 NPTF	1/8 NPTF	1/8 NPTF	R432025937
	Plug, M12, 4-pin	G 3/4	G 3/4	G 3/4	G 1/8	G 1/8	R432025938
	Plug, M12, 4-pin	3/4 NPTF	3/4 NPTF	3/4 NPTF	1/8 NPTF	1/8 NPTF	R432025939
	AS-i flat cable	G 3/4	G 3/4	G 3/4	G 1/8	G 1/8	R432025940
	AS-i flat cable	3/4 NPTF	3/4 NPTF	3/4 NPTF	1/8 NPTF	1/8 NPTF	R432025941

Valve systems → Supplementary products

Single subbase

► standard: ISO 5599-2 ► Frame size: ISO 3 ► compressed air connection output: G 3/4 - 3/4 NPTF ► Reversed pressure supply permissible

Part No.	Qn	Operational voltage AC 60 Hz	DC operating voltage	Voltage tolerance AC 60 Hz	Voltage tolerance DC	Cable exit
	[l/min]	[V]	[V]			
R432025931 R432025933 R432025935 R432025937 R432025938 R432025939 R432025940 R432025941	6000	110 V	24 V	-10% / +10%	-10% / +10%	straight

Dimensions in mm

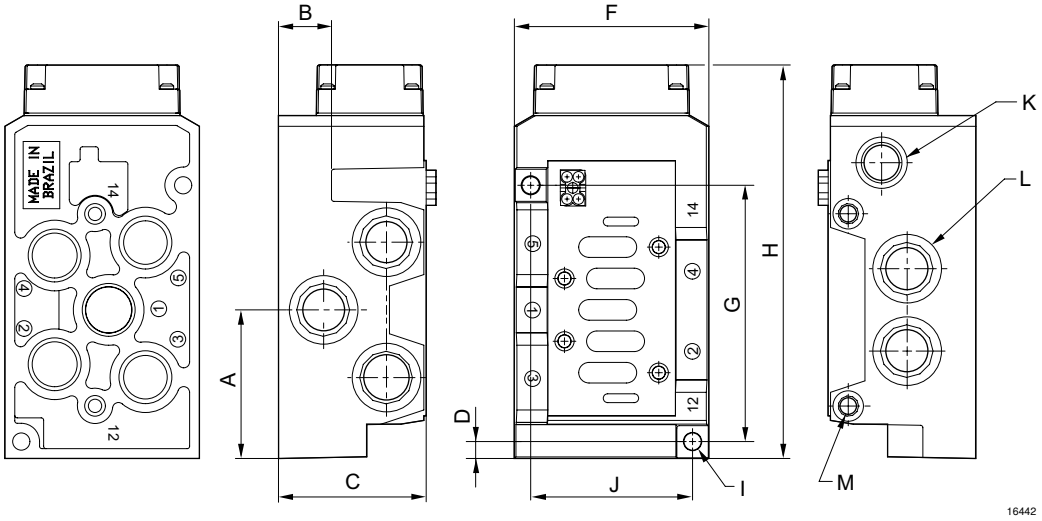

A	B	C	D	F	G	H	I	J	K	L	M			
76	27	75	11	99	131	201	9	82	1/2	3/4	1/8			

Valve systems → Supplementary products

Single subbase

► standard: ISO 5599-2 ► Frame size: ISO 3 ► compressed air connection output: G 3/4 - 3/4 NPTF ► Reversed pressure supply permissible

Dimensions in inches

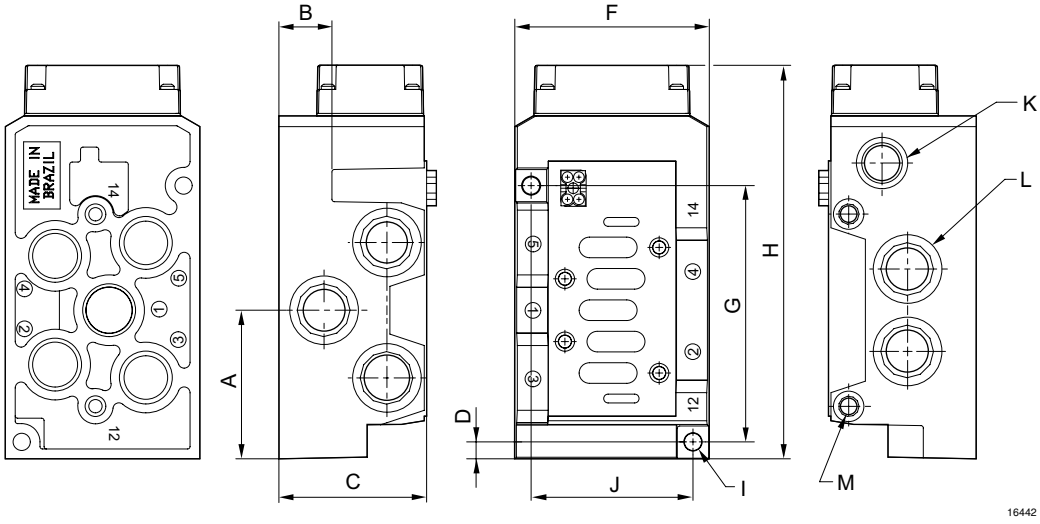

A	B	C	D	F	G	H	I	J	K	L	M			
2.98	1.06	2.96	0.41	3.9	5.14	7.9	0.35	3.24	1/2	3/4	1/8			