Pneumatic connection technologies → Couplings

Lock coupling with internal thread, Series CP1

► NW 2.7 - 7.8 mm

00010784

n33

Working pressure min./max.	0 bar / 16 bar
Ambient temperature min./max.	-10°C / +90°C
Medium temperature min./max.	-10°C / +90°C
Medium	Compressed air
Materials:	
Housing	Brass, nickel-plated
Release bushing	Brass, nickel-plated
Seal	Acrylonitrile Butadiene Rubber
Port	Brass, nickel-plated

The delivered product may vary from that in the illustration.

Nominal width	Port G	Qn	Weight	Fig.	Delivery quantity	Part No.
		[l/min]	[kg]		[Piece]	
2.7	M5	210	0.009	Fig. 1	2	R412010202
5	G 1/8	500	0.029	Fig. 2	2	**R412010010**
	G 1/4		0.031			**1823376004**
7.2	G 1/4	1500	0.081	Fig. 3	2	**1823376013**
7.8	G 1/4	2300	0.108	Fig. 4	1	**1823376037**
	G 3/8		0.113			**1823376038**
	G 1/2		0.134			**1823376039**

Fig. 1

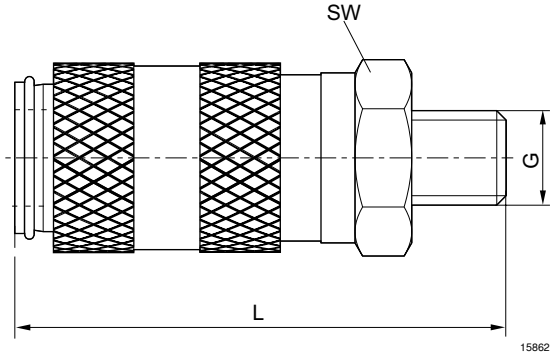

Part No.	Port G	Nominal width	L	SW								
R412010202	M5	2.7	25	9								

Lock coupling with internal thread, Series CP1

► NW 2.7 - 7.8 mm

Fig. 2

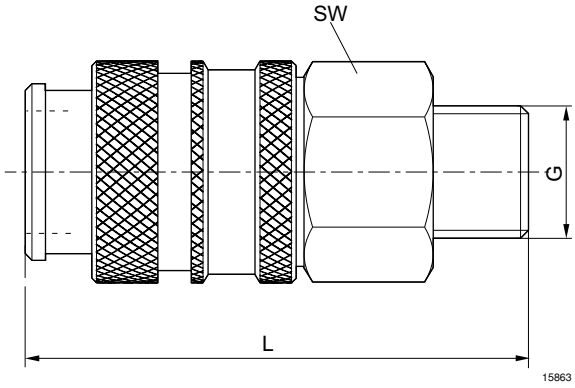

Part No.	Port G	Nominal width	L	SW								
R412010010	G 1/8	5	36.5	14								
1823376004	G 1/4	5	38.5	17								

Fig. 3

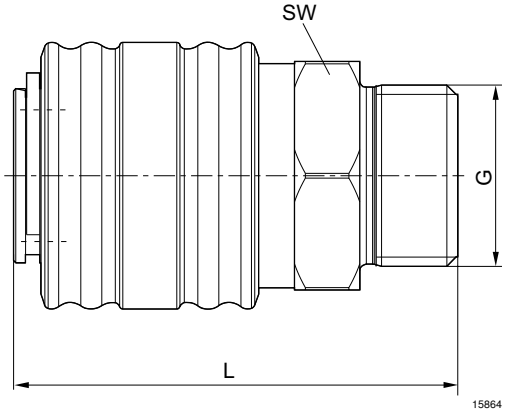

Part No.	Port G	Nominal width	L	SW								
1823376013	G 1/4	7.2	41	21								

Lock coupling with internal thread, Series CP1

► NW 2.7 - 7.8 mm

Fig. 4

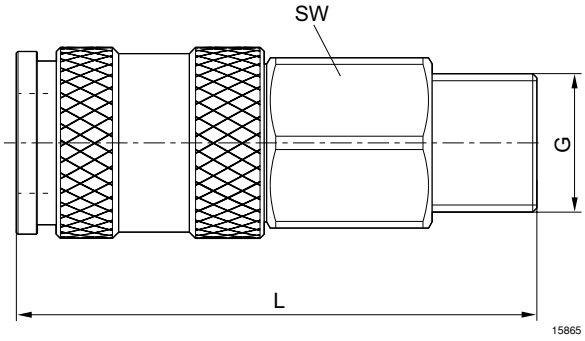

Part No.	Port G	Nominal width	L	SW								
1823376037	G 1/4	7.8	63	19								
1823376038	G 3/8	7.8	63	21								
1823376039	G 1/2	7.8	63	24								