Field bus connections → Supplementary products

Field bus connection with diagnosis, S-design

► Bus module with driver ► Field bus protocol: PROFIBUS DP / DeviceNet / Interbus S / ControlNet / Ethernet IP / MODBUS TCP / TCP/IP

00116966

Ambient temperature min./max.	+5°C / +50°C
Protection class, with plug	IP 65
Operational voltage electronics	24 V DC
Electronics voltage tolerance	-20% / +20%
Operational voltage valves	24 V DC
Number of solenoid coils	24
Total output for valves	3 A
Max. power consumption per coil	0.2 A
Max. cable length (DDL)	40 m
Max. number of DDL participants	14
Number of inputs over link structure	128
Number of outputs over link structure	128
VS connection	Socket (female) D-Sub 25-pin

Materials:

Housing	Stainless steel, Polyarylamide

The delivered product may vary from that in the illustration.

Technical Remarks
■ Max. current in 0 V line: 4 A
■ You will find assignment schemes for the product in the operating instructions, or contact the nearest Bosch Rexroth sales office.

Field bus protocol	Communication port Bus IN	Communication port Bus OUT	power supply	DDL OUT	Weight	Part No.
					[kg]	
PROFIBUS DP	Plug (male), M12, 5-pin, B-coded	Socket (female), M12x1, 5-pin	Plug (male), M12, 4-pin, A-coded	Socket (female), M12, 5-pin	0.4	3375000260
DeviceNet	Plug (male), M12, 5-pin, A-coded	Plug (male), M12x1, 5-pin	Plug (male), M12, 4-pin, A-coded	Socket (female), M12, 5-pin	0.52	3375000370
Interbus S	Plug (male), M12, 5-pin, B-coded	Socket (female), M12x1, 5-pin	Plug (male), M12, 4-pin, A-coded	Socket (female), M12, 5-pin	0.56	3375000460
ControlNet	BNC plug connector	BNC plug connector	Plug (male), M12, 4-pin, A-coded	Socket (female), M12, 5-pin	0.51	3375000560
Ethernet IP MODBUS TCP TCP/IP	Plug (male), M12, 5-pin, A-coded	Plug (male), M12x1, 5-pin	Plug (male), M12, 4-pin, A-coded	Socket (female), M12, 5-pin	0.67	R412000732

Part No.	Fig.	Note
3375000260	Fig. 1	1)
3375000370	Fig. 3	-
3375000460	Fig. 2	1)
3375000560	Fig. 3	1)
R412000732	Fig. 4	-
1) Manual (English) R499050031		

Field bus connections → Supplementary products

Field bus connection with diagnosis, S-design

► Bus module with driver ► Field bus protocol: PROFIBUS DP / DeviceNet / Interbus S / ControlNet / Ethernet IP / MODBUS TCP / TCP/IP

Fig. 1

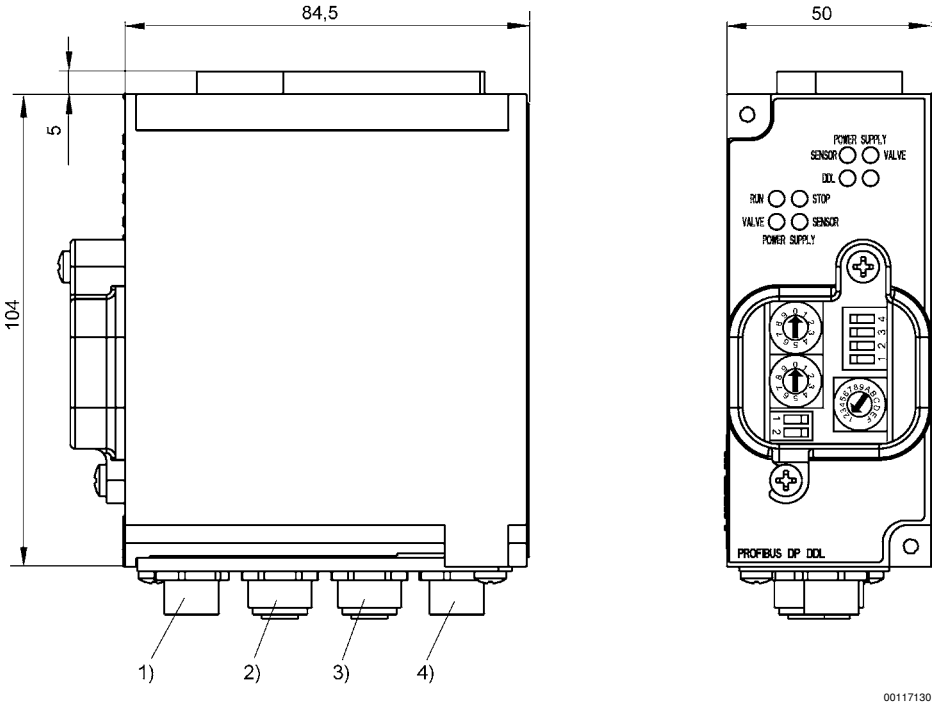

1) Bus IN, M12x1, B-coded
2) Bus OUT, M12x1, B-coded
3) DDL, M12, 5-pin
4) Power supply plug M12, 4-pin

Field bus connections → Supplementary products

Field bus connection with diagnosis, S-design

► Bus module with driver ► Field bus protocol: PROFIBUS DP / DeviceNet / Interbus S / ControlNet / Ethernet IP / MODBUS TCP / TCP/IP

Fig. 2

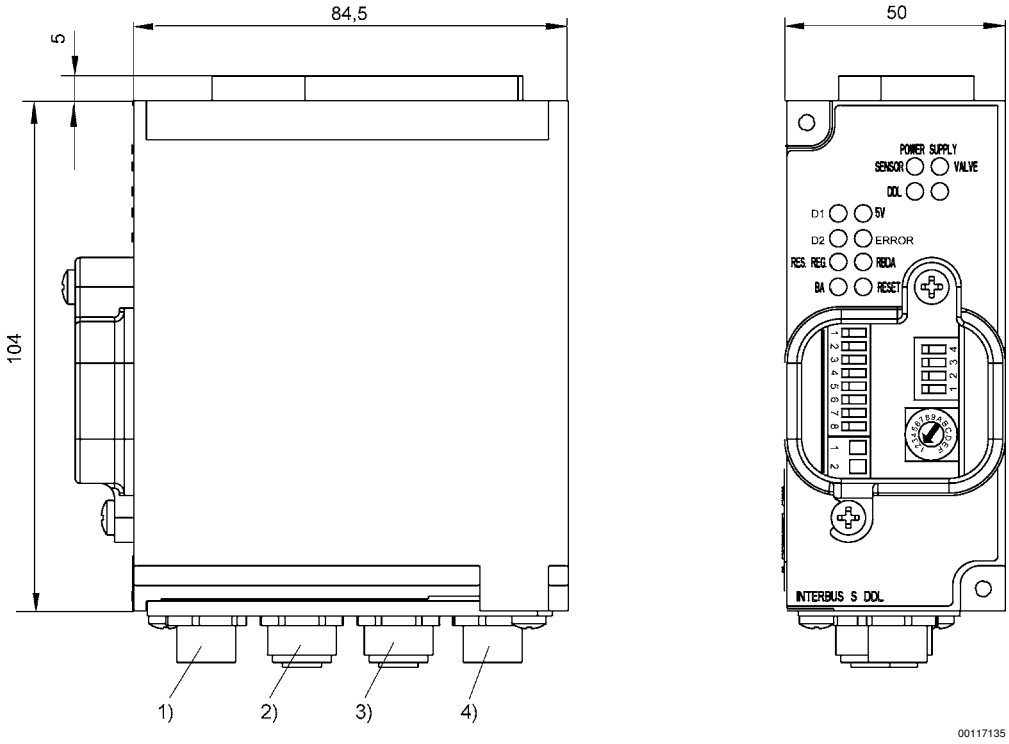

1) Bus IN, M12x1, B-coded
2) Bus OUT, M12x1, B-coded
3) DDL, M12, 5-pin
4) Power supply plug M12, 4-pin

Field bus connections → Supplementary products

Field bus connection with diagnosis, S-design

► Bus module with driver ► Field bus protocol: PROFIBUS DP / DeviceNet / Interbus S / ControlNet / Ethernet IP / MODBUS TCP / TCP/IP

Fig. 3

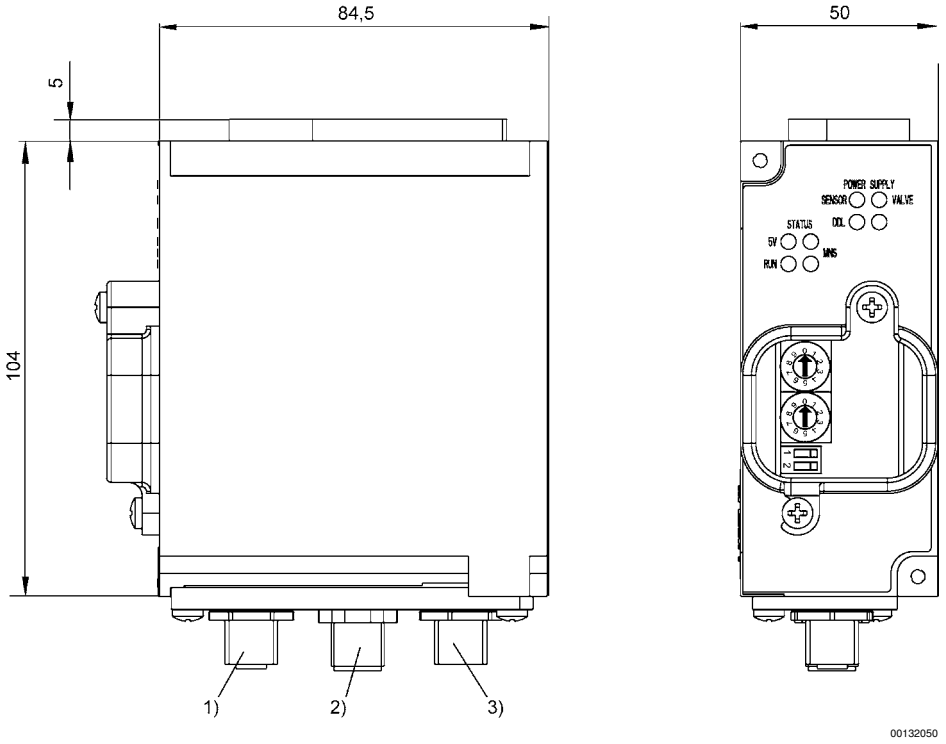

1) DDL, M12, 5-pin
2) Bus, BNC
3) Power supply plug M12, 4-pin

Field bus connections → Supplementary products

Field bus connection with diagnosis, S-design

► Bus module with driver ► Field bus protocol: PROFIBUS DP / DeviceNet / Interbus S / ControlNet / Ethernet IP / MODBUS TCP / TCP/IP

Fig. 4

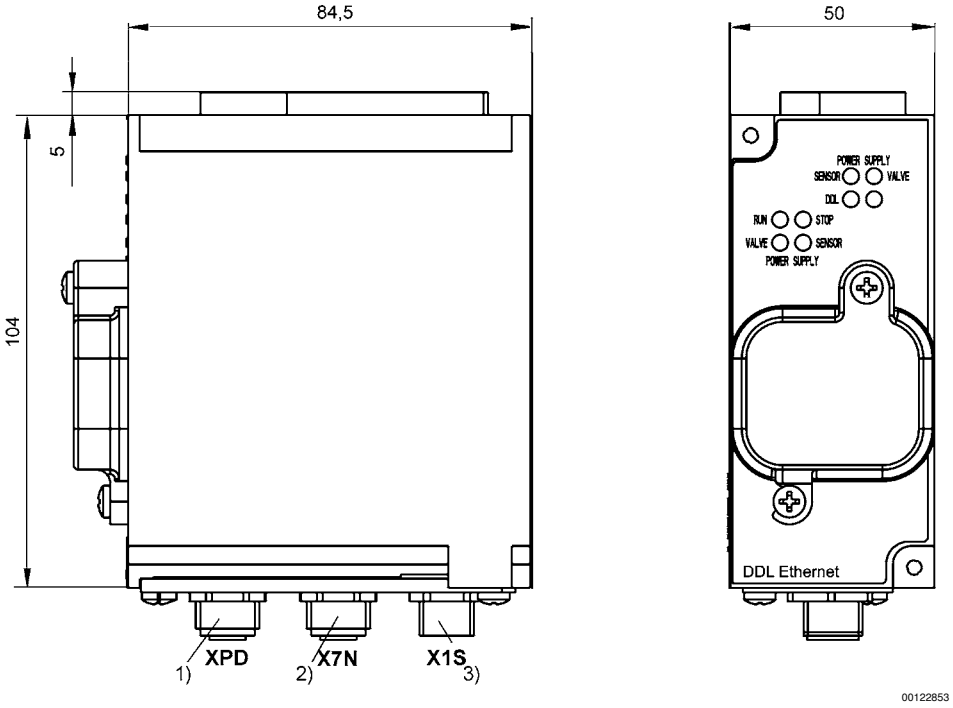

1) DDL, M12, 5-pin
2) Bus, M12x1, A-coded
3) Power supply plug M12, 4-pin