Preparation of compressed air → Maintenance units and components

3/2-way valve, electrically operated, Series AS1-SOV

► G 1/4 ► Air supply: left ► pipe connection ► ATEX optional

00137241_a

Version	Poppet valve, Can be assembled into blocks
Working pressure min./max.	2 bar / 10 bar
Medium	Compressed air
Medium temperature min./max.	-10°C / +50°C
Ambient temperature min./max.	-10°C / +50°C
Pilot	internal
Sealing principle	soft sealing
Max. particle size	25 µm
Oil content of compressed air	0 mg/m³ - 5 mg/m³
Degree of protection,with Plug	IP 65
Materials:	
Housing	Polyamide
Front plate	Acrylonitrile butadiene styrene
Seals	Acrylonitrile Butadiene Rubber

Technical Remarks

- The pressure dew point must be at least 15 °C under ambient and medium temperature and may not exceed 3 °C.
- ATEX optional: The ATEX ID depends on the selected pilot valve.

Operating voltage			Power consumption	Switch-on power		Holding power
DC	AC 50 Hz	AC 60 Hz	DC	AC 50 Hz	AC 60 Hz	AC 50 Hz
			W	VA	VA	VA
24 V	-	-	2	-	-	-
-	230 V	230 V	-	3	3	1.6

		Port	Ex-haust	Operating voltage			Qn		Weight	Fig.	Note	Part No.
				DC	AC 50 Hz	AC 60 Hz	1►2	2►3				
							[l/min]		[kg]			
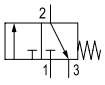		G 1/4	G 1/4	-	-	-	2000	380	0.1964	Fig. 1	1); 7)	R412014669
				-	-	-			0.2096	Fig. 1	2); 7)	R412014670
				24 V	-	-			0.2154	Fig. 2	3); 4); 5)	**R412014666**
				-	230 V	230 V			0.2143	Fig. 2	3); 4); 5)	R412014668
				24 V	-	-			0.2321	Fig. 3	3); 4); 6)	**R412010680**

1) Basic valve without pilot valve
2) Basic valve without pilot valve, with CNOMO subbase
3) Basic valve with pilot valve
4) Manual override: without detent
5) Electr. connection: Plug; ISO 15217, form C
6) Electr. connection: Plug; M12
7) ATEX optional
Nominal flow Qn at p1 = 6.3 bar and Δp = 1 bar

Preparation of compressed air → Maintenance units and components

3/2-way valve, electrically operated, Series AS1-SOV

► G 1/4 ► Air supply: left ► pipe connection ► ATEX optional

Flow rate characteristic

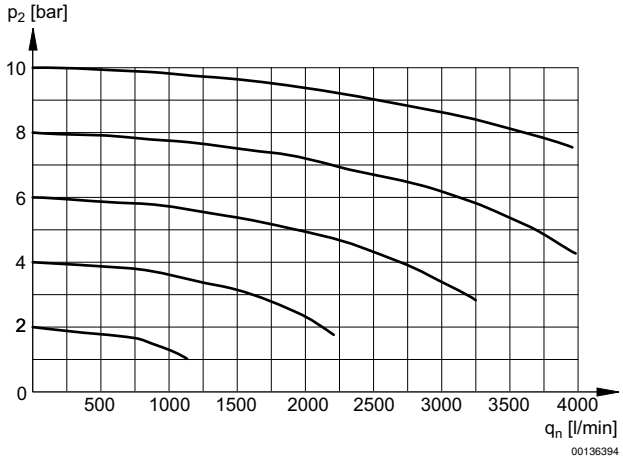

p2 = secondary pressure
qn = nominal flow

Rear exhaust

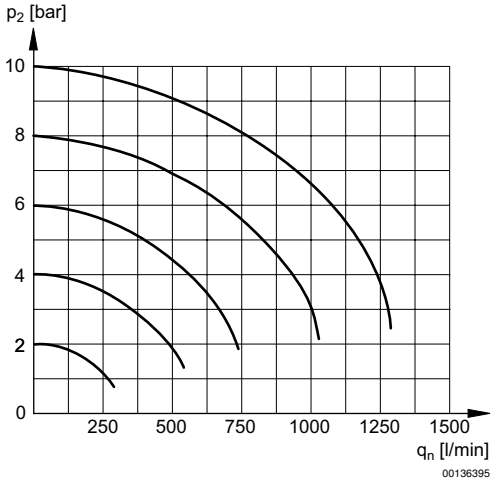

p2 = secondary pressure
qn = nominal flow

Preparation of compressed air → Maintenance units and components

3/2-way valve, electrically operated, Series AS1-SOV

► G 1/4 ► Air supply: left ► pipe connection ► ATEX optional

Fig. 1: 3/2-way valve with transition plate for pilot valve series DO30

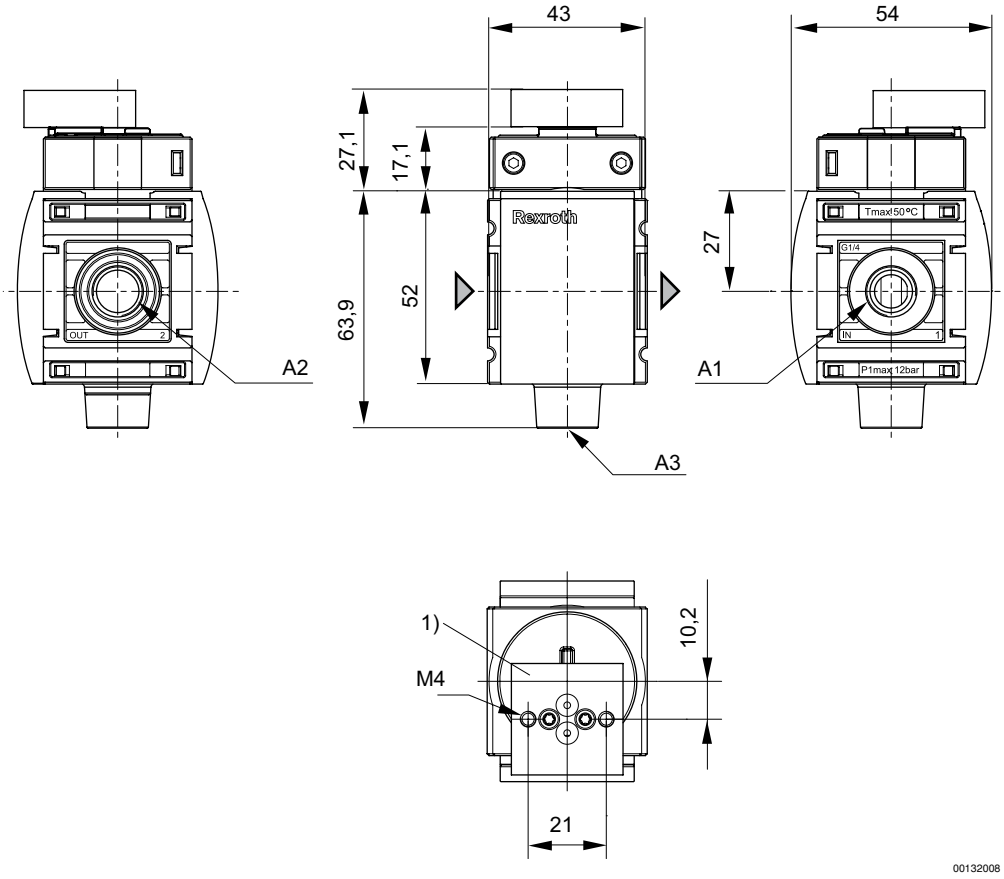

A1 = input
A2 = output
A3 = ventilation port
1) Transition plate with CNOMO porting configuration for pilot valve DO30

Preparation of compressed air → Maintenance units and components

3/2-way valve, electrically operated, Series AS1-SOV

► G 1/4 ► Air supply: left ► pipe connection ► ATEX optional

Fig. 2: 3/2-way valve with pilot valve and port for electrical connector form C

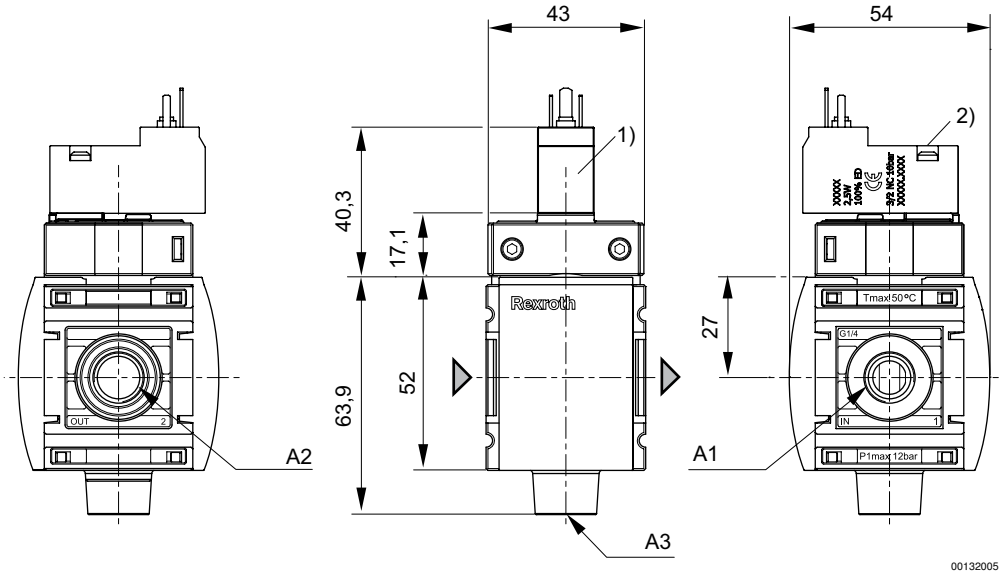

A1 = input
A2 = output
A3 = ventilation port
1) For electrical connector according to ISO 15217 (form C)
2) Manual override

Fig. 3: 3/2-way valve with pilot valve, push-in fitting M12x1

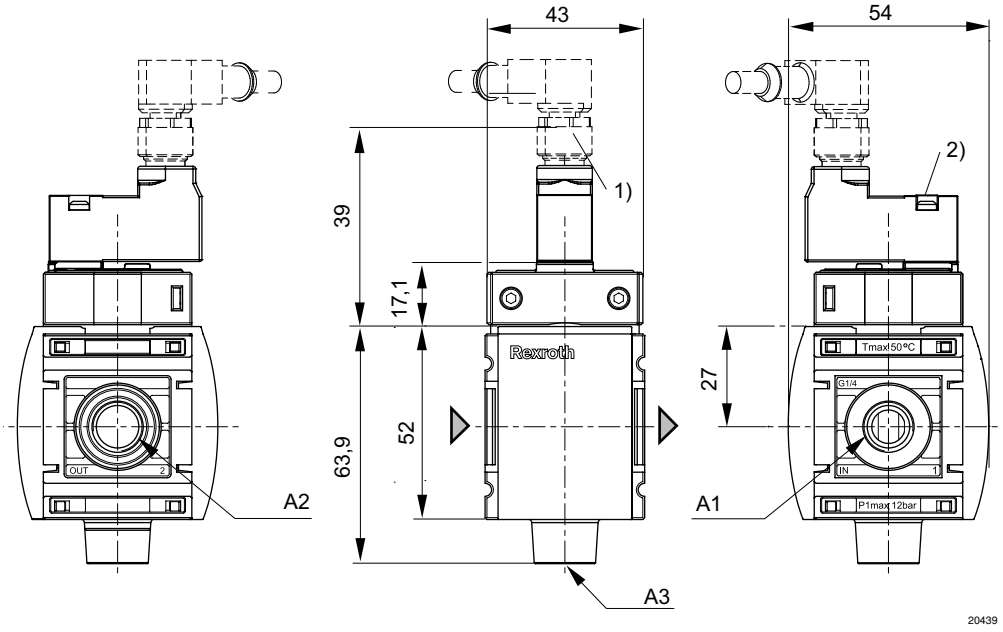

A1 = input
A2 = output
A3 = ventilation port
1) plug M12
2) Manual override

3/2-way valve, electrically operated, Series AS1-SOV

► G 1/4 ► Air supply: left ► pipe connection ► ATEX optional

Pin assignment M12x1

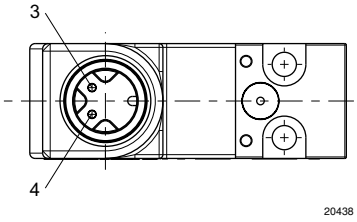

3: +/-
4: +/-