Preparation of compressed air → Maintenance units and components

Filling valve, pneumatically operated, Series AS1-SSV

► G 1/4 ► Air supply: right ► pipe connection

00137243

Version	Poppet valve, Can be assembled into blocks
Working pressure min./max.	2.5 bar / 12 bar
Medium	Compressed air
Medium temperature min./max.	-10°C / +50°C
Ambient temperature min./max.	-10°C / +50°C
Sealing principle	soft sealing
Max. particle size	5 µm
Materials:	
Housing	Polyamide
Front plate	Acrylonitrile butadiene styrene
Seals	Acrylonitrile Butadiene Rubber
Threaded bushing	Die cast zinc

Technical Remarks

- The pressure dew point must be at least 15 °C under ambient and medium temperature and may not exceed 3 °C.
- Builds up pressure slowly in the pneumatic systems, i.e. prevents a sudden pressure build-up during a restart after a mains pressure failure or avoids emergency OFF switching. This also avoids dangerous, jerky cylinder movements.

	Port	Qn		Weight	Part No.
			1►2		
		[l/min]		[kg]	
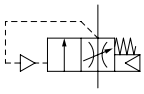	G 1/4	2000	2000	0.1336	R412014749
Nominal flow Qn at p1 = 6.3 bar and Δp = 1 bar					

Flow rate characteristic

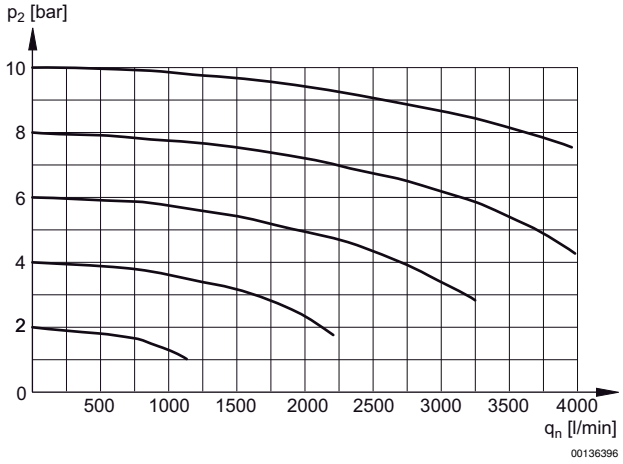

p2 = secondary pressure
qn = nominal flow

Preparation of compressed air → Maintenance units and components

Filling valve, pneumatically operated, Series AS1-SSV

► G 1/4 ► Air supply: right ► pipe connection

Dimensions

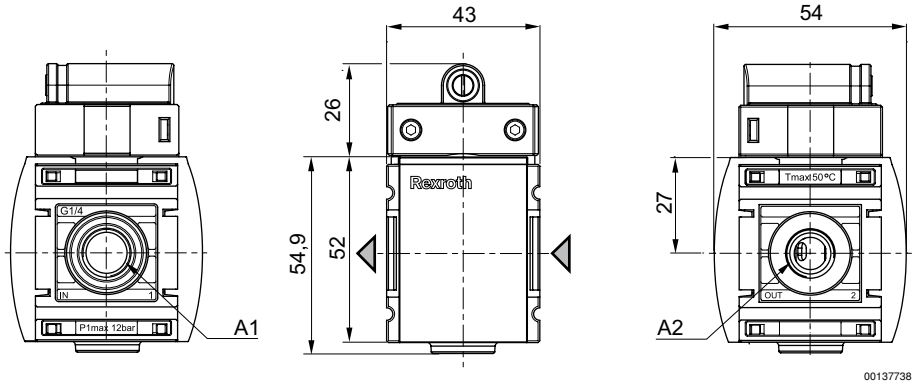

A1 = input
A2 = output