Piston rod cylinder →

Profile cylinder, Series PRA - inch

► Ø 32 - 125 mm ► Ports: 1/8 NPTF - 1/2 NPTF ► double-acting ► with magnetic piston ► cushioning: elastic, adjustable, pneumatically ► Piston rod: through, external thread

00134198

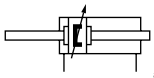

a17

Compressed air connection	internal thread
Working pressure min./max.	1.5 bar / 10 bar
Ambient temperature min./max.	-20°C / +80°C
Medium temperature min./max.	-20°C / +80°C
Medium	Compressed air
Max. particle size	50 µm
Oil content of compressed air	0 mg/m³ - 5 mg/m³
Pressure for determining piston forces	6,3 bar

Materials:	
Cylinder tube	Aluminum, anodized
Piston rod	Stainless steel
Front cover	Die-cast aluminum
End cover	Die-cast aluminum
Seal	Polyurethane
Nut for piston rod	Steel, galvanized
Scraper	Polyurethane

Technical Remarks

- The pressure dew point must be at least 15 °C under ambient and medium temperature and may not exceed 3 °C.
- The oil content of air pressure must remain constant during the life cycle.
- Use only the approved oils from Bosch Rexroth, see chapter „Technical information“.

Piston Ø		**[mm]**	**32**	**40**	**50**	**63**	**80**
Retracting piston force		[N]	435	660	1035	1765	2855
Extracting piston force		[N]	435	660	1035	1765	2855
Cushioning length		[mm]	16.5	15	17	16.5	19.5
Cushioning energy		[J]	4.8	9	15	27	54
Weight	0 mm stroke	[kg]	0.58	0.8	1.34	1.72	2.92
	+10 mm stroke	[kg]	0.031	0.048	0.072	0.079	0.124
Stroke max.		[mm]	1600	1900	2100	2500	2800

Piston Ø		**[mm]**	**100**	**125**			
Retracting piston force		[N]	4635	7220			
Extracting piston force		[N]	4635	7220			
Cushioning length		[mm]	19.5	22			
Cushioning energy		[J]	88	140			
Weight	0 mm stroke	[kg]	4.08	8.92			
	+10 mm stroke	[kg]	0.139	0.22			
Stroke max.		[mm]	2800	2750			

Piston rod cylinder →

Profile cylinder, Series PRA - inch

► Ø 32 - 125 mm ► Ports: 1/8 NPTF - 1/2 NPTF ► double-acting ► with magnetic piston ► cushioning: elastic, adjustable, pneumatically ► Piston rod: through, external thread

	Piston Ø **Piston rod thread** **Ports** **Piston rod Ø**	**32** **7/16-20 UNF** **1/8 NPTF** **12**	**40** **1/2-20 UNF** **1/4 NPTF** **16**	**50** **3/4-16 UNF** **1/4 NPTF** **20**	**63** **3/4-16 UNF** **3/8 NPTF** **20**	**80** **3/4-16 UNF** **3/8 NPTF** **25**
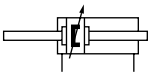	Stroke 25.4	R480176152	R480176240	R480176332	R480176414	R480176507
	50.8	R480176160	R480176248	R480176341	R480176423	R480176517
	76.2	R480176173	R480176255	R480176348	R480176435	R480176519
	101.6	R480176175	R480176267	R480176356	R480176440	R480176533
	127	R480176182	R480176276	R480176359	R480176448	R480176535
	152.4	R480176191	R480176283	R480176366	R480176454	R480176542
	177.8	R480176204	R480176289	R480176378	R480176463	R480176555
	203.2	R480176212	R480176300	R480176389	R480176477	R480176559
	228.6	R480176214	R480176308	R480176391	R480176481	R480176573
	254	R480176226	R480176313	R480176404	R480176489	R480176577
	304.8	R480176236	R480176319	R480176408	R480176496	R480176582
	Piston Ø **Piston rod thread** **Ports** **Piston rod Ø**	**100** **3/4-16 UNF** **1/2 NPTF** **25**	**125** **1-14 UNF** **1/2 NPTF** **32**			
	Stroke 25.4	R480176597	R480176680			
	50.8	R480176604	R480176693			
	76.2	R480176612	R480176700			
	101.6	R480176615	R480176706			
	127	R480176625	R480176715			
	152.4	R480176630	R480176724			
	177.8	R480176645	R480176726			
	203.2	R480176651	R480176740			
	228.6	R480176659	R480176749			
	254	R480176667	R480176750			
	304.8	R480176674	R480176762			

Note: The stroke values have been converted from inch to mm. (Conversion factor 1 inch = 25.4 mm)

Configurable product	
	This product is configurable. Please use our Internet configurator at www.boschrexroth.com/pneumatics or contact the nearest Bosch Rexroth sales office.

Piston rod cylinder →

Profile cylinder, Series PRA - inch

► Ø 32 - 125 mm ► Ports: 1/8 NPTF - 1/2 NPTF ► double-acting ► with magnetic piston ► cushioning: elastic, adjustable, pneumatically ► Piston rod: through, external thread

Dimensions in inches

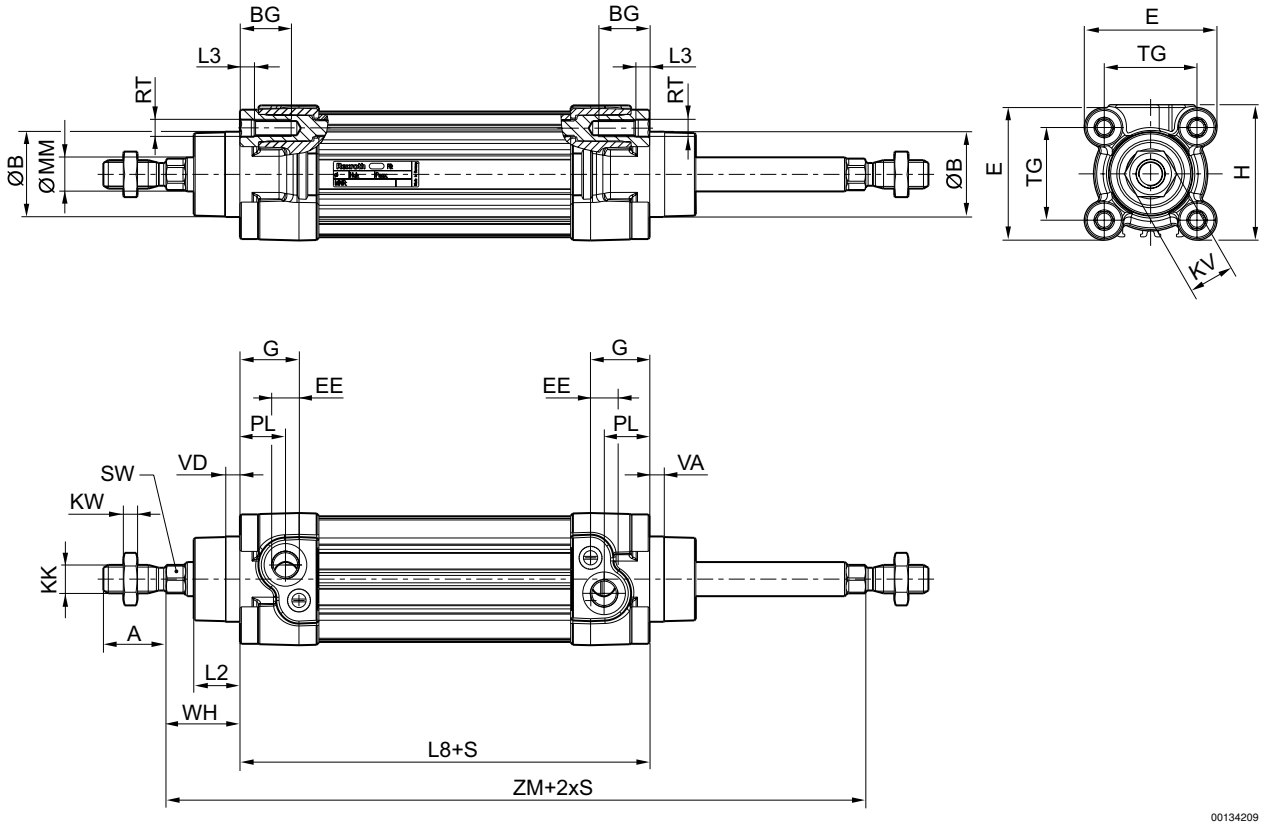

S = stroke

Dimensions in inches

Ø [mm]	Ø [inch]	A -0,04	ØB ↲ d11	BG	E	EE	KK	G	H	KV	KW	ØMM f8	PL
32	1 1/4	0.87	1.18	0.63	1.83	1/8 NPT	7/16 - 20 UNF	1.09	1.87	0.63	0.2	0.47	0.63
40	1 1/2	0.94	1.38	0.63	2.09	1/4 NPT	1/2 - 20 UNF	1.31	2.09	0.71	0.24	0.63	0.79
50	2	1.26	1.57	0.63	2.56	1/4 NPT	3/4 - 16 UNF	1.22	2.56	0.94	0.31	0.79	0.75
63	2 1/2	1.26	1.77	0.63	2.95	3/8 NPT	3/4 - 16 UNF	1.22	2.95	0.94	0.31	0.79	0.94
80	3	1.57	1.77	0.67	3.74	3/8 NPT	3/4 - 16 UNF	1.51	3.74	1.18	0.39	0.98	0.93
100	3 1/2	1.57	2.17	0.67	4.53	1/2 NPT	3/4 - 16 UNF	1.51	4.53	1.18	0.39	0.98	0.98
125	4 1/2	2.13	2.36	0.79	5.51	1/2 NPT	1 - 14 UNF	1.66	5.51	1.61	0.53	1.26	1.3

Ø [mm]	Ø [inch]	L2	L3	L8	RT	SW	TG	VA	WH	ZM
32	1 1/4	0.64	4.5	3.7±0.02	M6	0.39	1.28±0.02	0.2	1.02±0.06	5.75+0.12/-0.06
40	1 1/2	0.72	4.5	4.13±0.03	M6	0.51	1.5±0.02	0.2	1.18±0.06	6.5+0.12/-0.06
50	2	0.98	4.5	4.17±0.03	M8	0.67	1.83±0.02	0.2	1.46±0.06	7.09+0.12/-0.06
63	2 1/2	0.98	4.5	4.76±0.03	M8	0.67	2.22±0.03	0.2	1.46±0.07	7.68+0.12/-0.06

Supplementary products
Part numbers marked in bold are available from the central warehouse in Germany, see the shopping basket for more detailed information
Pneumatics catalog, online PDF, as of 2013-03-20, © Bosch Rexroth AG, subject to change

Profile cylinder, Series PRA - inch

► Ø 32 - 125 mm ► Ports: 1/8 NPTF - 1/2 NPTF ► double-acting ► with magnetic piston ► cushioning: elastic, adjustable, pneumatically ► Piston rod: through, external thread

Ø [mm]	Ø [inch]	L2	L3	L8	RT	SW	TG	VA	WH	ZM
80	3	1.3	0	5.04±0.03	M10	0.87	2.83±0.03	0.2	1.81±0.07	8.66+0.12/-0.06
100	3 1/2	1.42	0	5.43±0.04	M10	0.87	3.5±0.03	0.2	2.01±0.07	9.45+0.14/-0.08
125	4 1/2	1.77	0	6.3±0.04	M12	1.06	4.33±0.04	0.28	2.56±0.09	11.42+0.14/-0.08